ORDER NO. AD9206155C2

Service Manual

Receiver

AV Control Stereo Receiver

SA-GX130

Colour

(K)...Black Type

Area

Suffix for Model No.	Area	Colour
(E)	Europe.	(K)
(EB)	Great Britain.	

SPECIFICATIONS (DIN 45 500)

■ AMPLIFIER SECTION

Power output	
DIN 1 kHz (T.H.D. 1%)	2×60 W (4 Ω)
40 Hz~20 kHz continuous power output both channels driven	2×40 W (8 Ω)
Total harmonic distortion	
rated power at 40 Hz~20 kHz	0.5% (8 Ω)
half power at 1 kHz	0.03% (8 Ω)
Intermodulation distortion rated power at 60 Hz: 7 kHz=4:1, SMPTE	0.5% (8 Ω)
Power bandwidth both channels driven, −3 dB	10 Hz~40 kHz (8 Ω)
Damping factor	40 (8 Ω)
Input sensitivity and impedance	
PHONO	3 mV/47 kΩ
CD, VCR 1	200 mV/22 kΩ
TAPE/VCR 2	200 mV/22 kΩ
PHONO maximum input voltage (1 kHz, RMS)	150 mV
S/N at rated power (8 Ω)	
PHONO	70 dB (IHF, A: 80 dB)
CD, VCR 1	80 dB (IHF, A: 90 dB)
TAPE/VCR 2	80 dB (IHF, A: 90 dB)
Frequency response	
PHONO	RIAA standard curve ±0.8 dB (30 Hz~15 kHz)
CD, VCR 1	10 Hz~40 kHz (±3 dB)
TAPE/VCR 2	10 Hz~40 kHz (±3 dB)
Tone controls	
Bass	50 Hz, +10 dB~−10 dB
Treble	20 kHz, +10 dB~−10 dB
Loudness control (volume at −30 dB)	50 Hz, +9 dB
Output voltage	
VCR 1 OUT	200 mV
TAPE/VCR 2 REC (OUT)	200 mV
Channel balance, 250 Hz~6.3 kHz	±1 dB
Channel separation	55 dB
Headphones output level and impedance	430 mV/330 Ω
Load impedance	
A or B	4 Ω~16 Ω
A and B	8 Ω~16 Ω

■ FM TUNER SECTION

Frequency range	87.50~108.00 MHz
Sensitivity	
S/N 30 dB	1.5 μV (75 Ω)
S/N 26 dB	1.3 μV (75 Ω)
S/N 20 dB	1.2 μV (75 Ω)
IHF usable sensitivity	1.5 μV (IHF'58, 75 Ω)
IHF 46 dB stereo quieting sensitivity	22 μV/75 Ω
Total harmonic distortion	
MONO	0.2%
STEREO	0.3%
S/N	
MONO	60 dB (75 dB, IHF)
STEREO	58 dB (71 dB, IHF)
Frequency response	20 Hz~15 kHz, +1 dB~−2 dB
Alternate channel selectivity	
±400 kHz	65 dB
Capture ratio	1.0 dB
Image rejection at 98 MHz	40 dB
IF rejection at 98 MHz	70 dB
Spurious response rejection at 98 MHz	70 dB
AM suppression	50 dB
Stereo separation	
1 kHz	40 dB
Carrier leak	
19 kHz	−55 dB (−60 dB, IHF)
38 kHz	−50 dB (−55 dB, IHF)
Channel balance (250 Hz~6.3 kHz)	±1.5 dB
Limiting point	1.2 μV
Bandwidth	
IF amplifier	180 kHz
FM demodulator	1000 kHz
Antenna terminals	75 Ω (unbalanced)

Technics

■ AM TUNER SECTION

Frequency range	
MW	522 kHz~1611 kHz (9-kHz steps) 530 kHz~1620 kHz (10-kHz steps)
LW	144 kHz~288 kHz
Sensitivity (S/N 20 dB)	
MW	20 μV, 330 μV/m
LW	45 μV
Selectivity (±9 kHz)	
MW (at 999 kHz)	55 dB
LW (at 252 kHz)	55 dB
Image rejection	
MW (at 999 kHz)	40 dB
LW (at 252 kHz)	40 dB
IF rejection	
MW (at 999 kHz)	55 dB
LW (at 252 kHz)	55 dB

■ GENERAL

Power consumption	200 W
Power supply	AC 50 Hz/60 Hz, 230 V/240 V
Dimensions (W × H × D)	430 × 125 × 305 mm
Weight	6.5 kg

■ REMOTE CONTROL TRANSMITTER

Control keys	32 keys
Dimensions (W × H × D)	70 × 175 × 27 mm
Weight (including batteries)	125 g
Power source	TWO "AAA" (UM-4, R03)

Notes:

1. Specifications are subject to change without notice. Weight and dimensions are approximate.
2. Total harmonic distortion is measured by the digital spectrum analyzer.

■ CONTENTS

	Page
ACCESSORIES	2
BEFORE USE	2
CONNECTIONS TO EQUIPMENT	3, 4
FRONT PANEL CONTROLS AND FUNCTIONS	5, 6
REMOTE CONTROL OPERATION	7, 8
DISASSEMBLY INSTRUCTIONS	9~12
MEASUREMENTS AND ADJUSTMENTS	13
TERMINAL FUNCTION OF IC	14
INTERNAL CONNECTION OF FL	15
BLOCK DIAGRAM	16~18
SCHEMATIC DIAGRAM	19~26
TERMINAL GUIDE OF IC'S TRANSISTORS AND DIODES	20
WIRING CONNECTION DIAGRAM	27
PRINTED CIRCUIT BOARDS	28~32
EXPLODED VIEWS	33, 34
REPLACEMENT PARTS LIST	35~37
RESISTORS & CAPACITORS	38~40
PACKAGING	40

■ ACCESSORIES

- AC power supply cord..... 1 pc.
  (RJA0019-1K): (E)
  (SJA193): (EB)

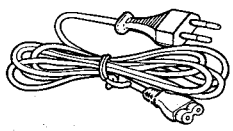

- FM indoor antenna
  (RSA0007) ..... 1 pc.

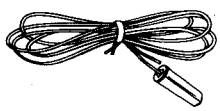

- AM loop antenna
  (SPB1163T) ..... 1 pc.

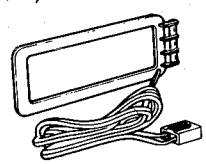

- AM antenna holder
  (SMA231M) ..... 1 pc.

- Screws (XTN3+10AFZ) ..... 2 pcs.

- Remote control transmitter
  (RAK-SA302E)..... 1 pc.

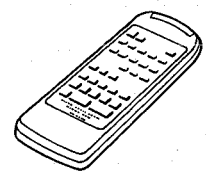

- Batteries (UM-4, "AAA", R03).. 2 pcs.

- Attachment plug..... 1 pc.
  (SJP9009): (EB)

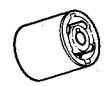

■ BEFORE USE

Be sure to disconnect the mains cord before adjusting the voltage selector.
Use a flat-tip (−) screwdriver to set the voltage selector (on the rear panel) to the voltage setting for the area in which the unit will be used.

Note that this unit will be seriously damaged if this setting is not made correctly.

■ CONNECTIONS TO EQUIPMENT

Caution:
Do not place books, etc., on top of this unit so that the heat radiation vents remain unblocked.

Stereo connection cable
(not included)
White (L)
Red (R)

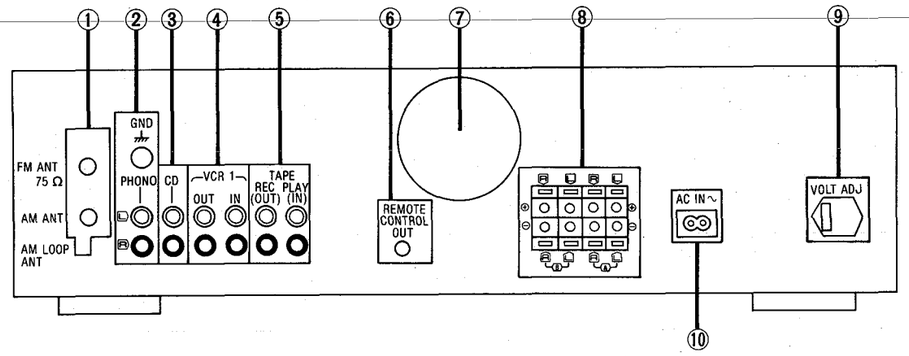

① Antenna connection terminals

② "PHONO" terminals

Connect a turntable only. Do not connect any other sound source to these terminals.

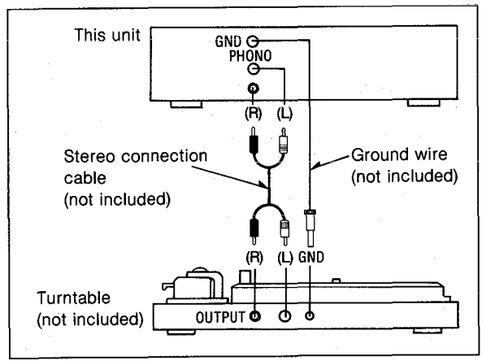

③ "CD" terminals

Connect a compact disc player.

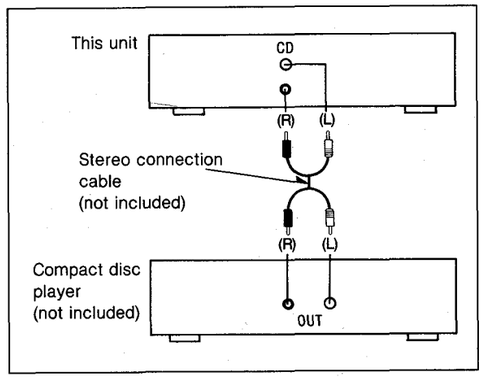

④ "VCR 1" terminals

Connect a VCR.
(See the operating instructions of the VCR.)

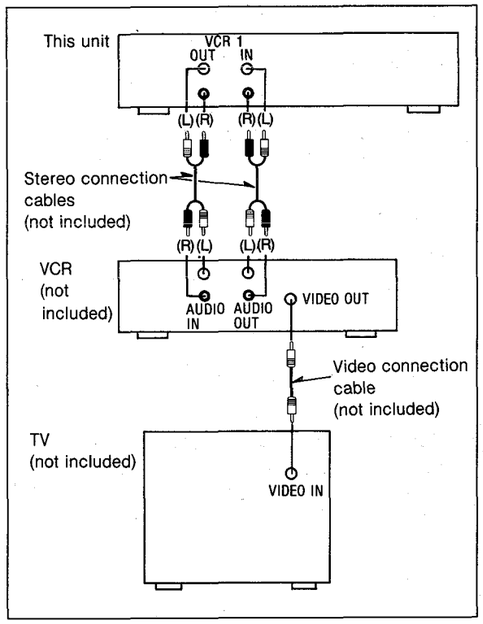

⑤ "TAPE/VCR 2" terminals

Connect a tape deck or second VCR. (This corresponds to the "TAPE" terminals in the above illustration).

⑥ Remote control OUT terminal (REMOTE CONTROL OUT)

This terminal can be used only with Technics components which have the appropriate remote control terminal.
(Consult your dealer for details.)
Proper connection with remote control connection cables SJP2257T will allow control of some functions from this unit's remote control transmitter.

Connect to a tape deck and/or compact disc player as shown below.

If a tape deck is not being used, the compact disc player can be connected directly (dotted line).

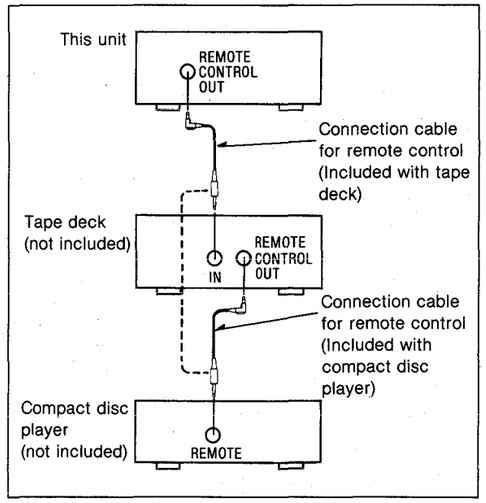

Note:
For a compact disc player with a remote control sensor the above connection is not necessary.

⑦ Cooling fan

The cooling fan operates at high output power levels only.

⑧ Speaker connection terminals

⑨ Voltage selector (VOLT ADJ)

To set the power voltage

Set the voltage selector to the voltage setting for the area in which the unit will be used.
[Use a minus (−) screwdriver]

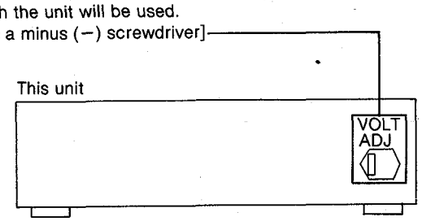

Note:
Note that this unit will be seriously damaged if this setting is not made correctly.

⑩ AC IN socket (AC IN)

■ FRONT PANEL CONTROLS AND FUNCTIONS

Tuner section

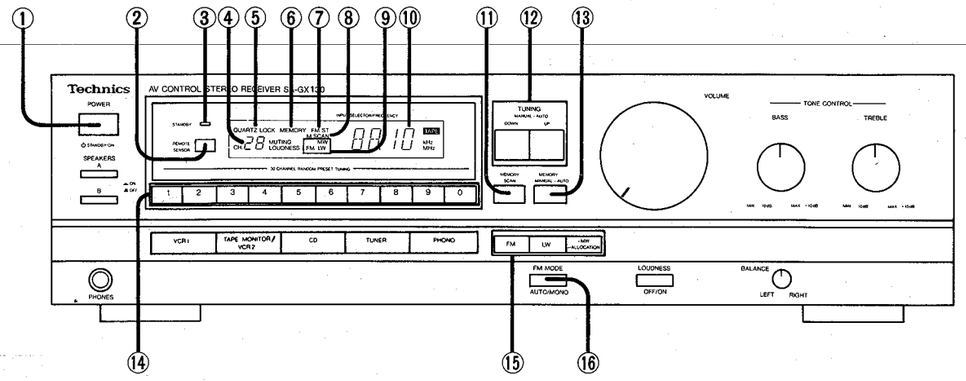

① **Power " ⏻ STANDBY/ON" switch (POWER, ⏻ STANDBY/ON)**
This switch switches ON and OFF the secondary circuit power only. The unit is in the "standby" condition when this switch is set to the ⏻ STANDBY position. Regardless of the switch setting, the primary circuit is always "live" as long as the power cord is connected to an electrical outlet.

② **Remote control signal receptor (REMOTE SENSOR)**
Receives the signals from the remote control.

③ **"STANDBY" indicator (STANDBY)**
This indicator illuminates when the "STANDBY" mode is set by the main unit or the remote control transmitter.

④ **Channel display**
This display shows the channel number selected by one of the preset-tuning buttons.
Also this display shows the channel number for about 3 seconds during memory scan operation.

⑤ **Quartz-lock indicator (QUARTZ LOCK)**
This indicator illuminates when the unit is tuned precisely to a broadcast station.

⑥ **Memory indicator (MEMORY)**
This indicator illuminates when the memory button is pressed.

⑦ **FM stereo indicator (FM ST)**
This indicator automatically illuminates when an FM stereo broadcast is being received.
Note:
It will not illuminate if the FM mode selector is set to the monaural mode.

⑧ **Memory scan indicator (M. SCAN)**
This indicator illuminates when the memory scan button is pressed.

⑨ **Band indicators (FM, LW, MW)**
Indicates the selected band.

⑩ **Input selector/frequency display (INPUT SELECTOR/FREQUENCY)**
Displays the selected source or broadcast frequency.

⑪ **Memory scan button (MEMORY SCAN)**
This button is used to locate a desired broadcast station; each broadcast station is selected for about 3 seconds.

⑫ **Tuning buttons (TUNING)**
These buttons are used for tuning to the desired broadcast station.

⑬ **Memory button (MEMORY)**
This button is used when presetting broadcast station frequencies into memory.

⑭ **Preset-tuning buttons (1 – 0) (30 CHANNEL RANDOM PRESET TUNING)**
These buttons are used to preset broadcast frequencies into the memory of this unit and to recall the desired preset stations.

⑮ **Band selectors (FM, LW, MW)**
FM: Press this button to listen to an FM broadcast.
LW: Press this button to listen to an LW broadcast.
MW: Press this button to listen to an MW broadcast.
ALLOCATION: When the MW button is pressed for about 3 seconds, the MW frequency step will change to 10 kHz per step. (This step is set to 9 kHz before shipment.) In order to return to the original frequency indication, press this button for about 3 seconds again.

⑯ **FM mode selector (FM MODE)**
This unit automatically switches to the stereo mode when an FM stereo broadcast is received. This selector is used to select the mode (stereo or monaural) of FM broadcast signals.

Amplifier section

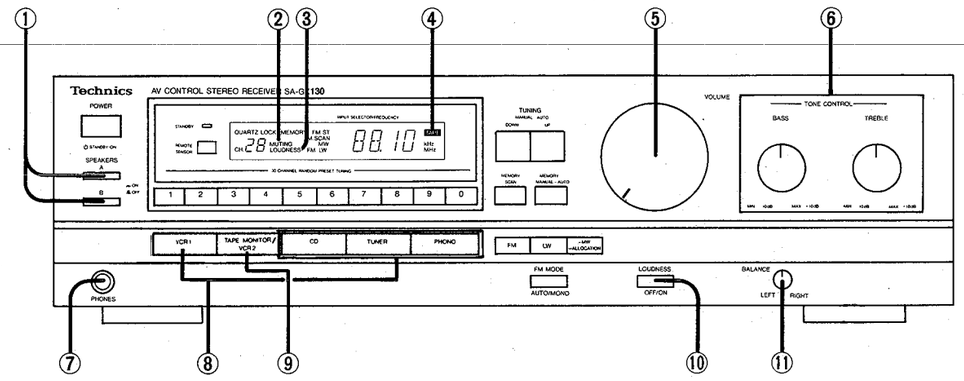

① **Speaker selectors (SPEAKERS)**
These selectors are used to select the speaker system(s) (A and/or B).

② **Muting indicator (MUTING)**
This indicator will illuminate when the muting button (on the remote control transmitter) is pressed.

③ **Loudness indicator (LOUDNESS)**
This indicator will illuminate when the loudness button is pressed.

④ **Tape indicator (TAPE).**
This indicator will illuminate when the tape-monitor/VCR 2 button is pressed.

⑤ **Volume control (VOLUME)**

⑥ **Tone controls (BASS, TREBLE)**
The bass control is used to adjust the low-frequency sound range, and the treble control is used to adjust the high-frequency sound range.

⑦ **Headphones jack (PHONES)**

⑧ **Input selector buttons**
These buttons are used to select the sound source to be heard, such as a disc, radio broadcasts, etc. The selected sound source is shown on the input selector/frequency display.
The "PHONO" input selector has two functions: when pressed momentarily it selects "PHONO". When pressed and held for about 4 seconds, it de-activates the muting function.

⑨ **Tape-monitor/VCR 2 button (TAPE MONITOR/VCR 2)**
Press this button to listen to a tape or second VCR connected to the "TAPE/VCR 2" terminals.
To listen to some other source, press this button once again (so that the indicator is switched OFF).

⑩ **Loudness button (LOUDNESS)**
Set to the "ON" position (the loudness indicator will illuminate); when listening to music at low volume. Auditory perception of sound in the low frequency range falls off at low volume, but when the switch is in this position, this deficiency is compensated for, so that the full impact of tha musical performance can be enjoyed.

⑪ **Balance control (BALANCE)**

REMOTE-CONTROL OPERATION

- This remote control transmitter can be used for control of a Technics cassette tape deck or a compact disc player with a remote control terminal.
  Consult your dealer for details.
- For detailed information concerning operation steps, etc., please refer to the appropriate page for each unit and the respective operating instructions.
- For this system, you can listen to tapes or compact discs, etc., by operating the remote control transmitter without using this unit's input selectors.
- Make sure that the power of each unit is set to the "ON" position, before beginning the operations.

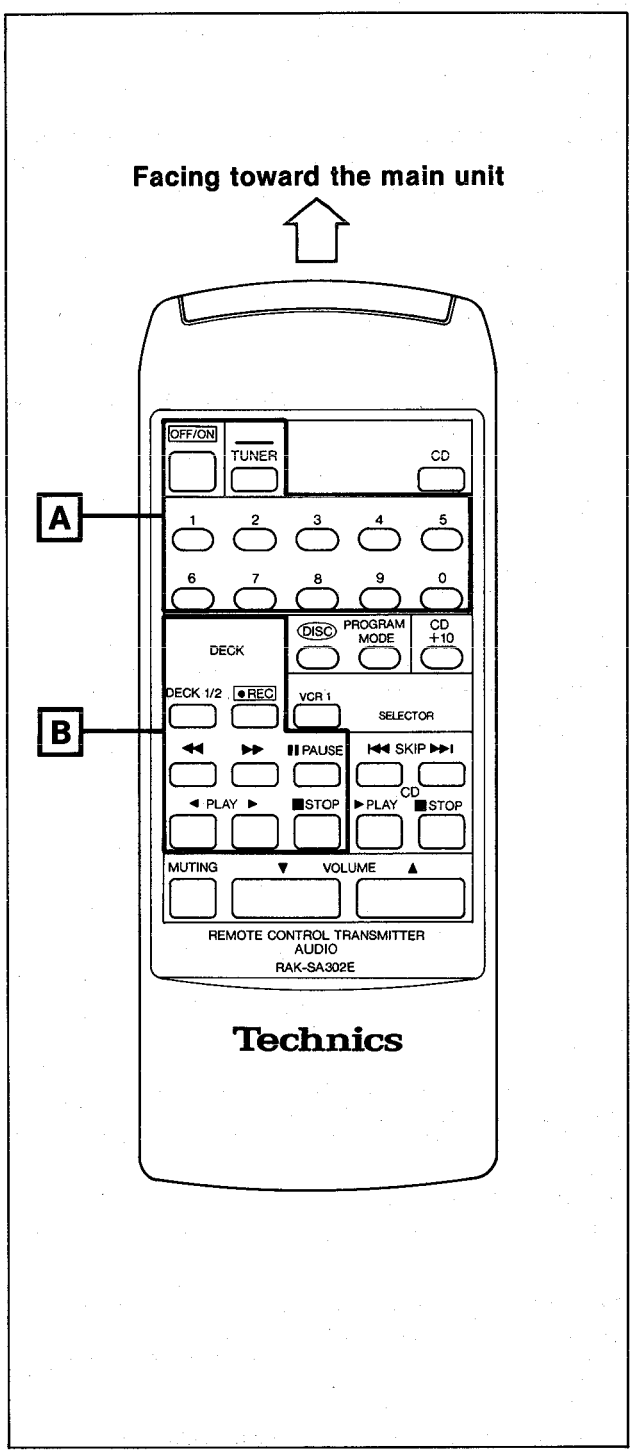

A Tuner controls

TUNER
Press this button first to use the "OFF/ON" button or the 1 – 0 buttons.

OFF/ON
This button can be used for ON and OFF switching of this unit. When switching the power ON and OFF, be sure to first press the "TUNER" button.

1 – 0
Press these buttons to select the desired preset channel.
When these buttons are used, be sure to first press the "TUNER" button.
To designate channels 1–9:
Press the appropriate (1–9) preset-tuning button.
Note: When selecting channel 1, 2 or 3 enter the selection "01", "02" or "03". If only "1", "2" or "3" is pressed, channel access will be delayed by two seconds.
To designate channels 10–30:
① Press the button for the "tens" digit (1, 2 or 3).
② Press the button for the "units" digit (1–0) within 2 seconds after pressing the first button.

Note:
If the interval between pressing the first button and pressing the second button is more than about 2 seconds, the setting may not be made correctly. If this happens, make the setting once again.

B Tape deck controls

DECK 1/2
Press this button to select the deck ("DECK 1" or "DECK 2") to be controlled.

● REC
Press this button to change to the recording stand-by mode.

◀◀ , ▶▶
Press one of these buttons to advance or rewind the tape while the unit is in the stop mode.
Press one of these buttons to select the desired tune while the unit is in the play mode. (Only applicable to a Technics tape deck with the "music select" functions.)

II PAUSE
Press this button to temporarily stop playback or recording.
Press the playback button to resume the playback or recording.

◀ PLAY ▶
Press one of these buttons to begin playback or recording, pressing the button corresponding to the side of the tape to be played back (or recorded).
▶ : For the "forward (A)" side of the tape
◀ : For the "reverse (B)" side of the tape
Note:
Depending on which Technics tape deck is used in combination with this unit, tape deck 1 might be the "A"-side playback-only type.

■ STOP
Press this button to stop tape movement.

Note
Depending on which Technics tape deck is used in combination with this unit, the pause of the playback (and the recording), and the recording functions of tape deck 1 might not be possible by using the remote control transmitter.

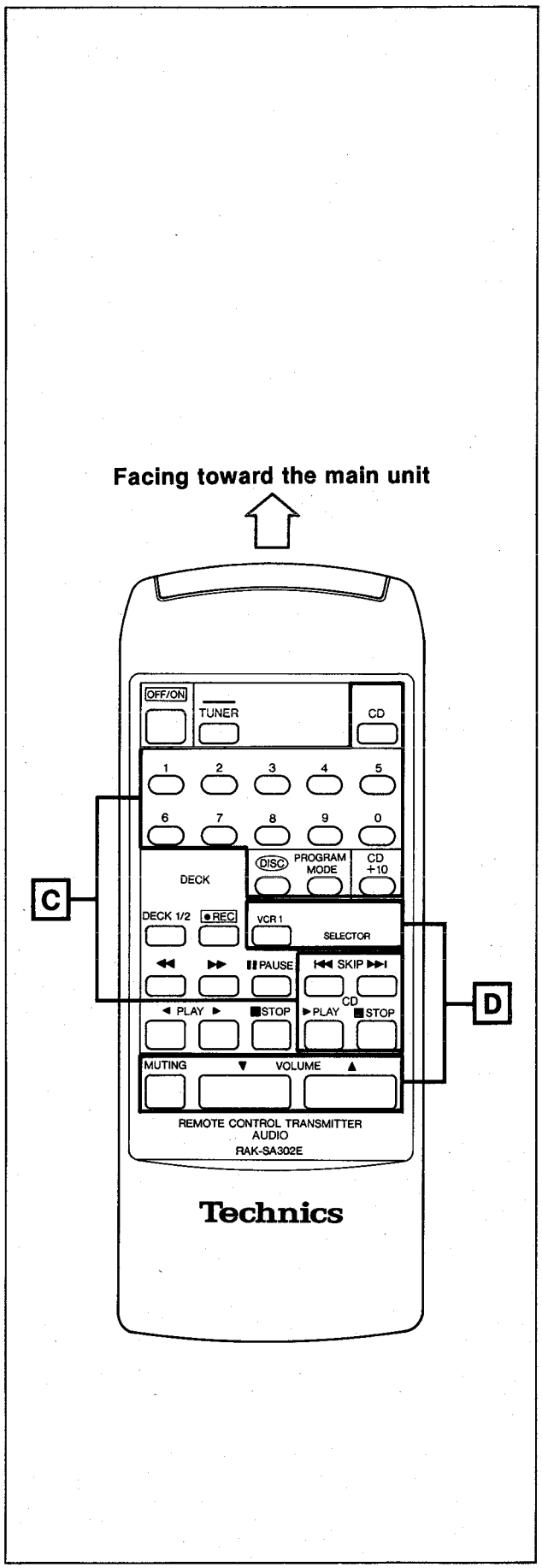

C Compact disc player controls

CD
Press this button first to use the 1 – +10 buttons.

1 – +10
Press these buttons to select the desired track.
Playback begins from the track selected.
When these buttons are used, be sure to first press the "CD" button.
Tracks 1–9:
Press the appropriate numeric button 1 – 9 directly.
To select a two-digit track number over 10:
Press the +10 button the necessary number of time to select the "tens" digit, and then one of the 1 – 0 buttons to select the "units" digit.

DISC
If a Technics multi compact disc player is used in combination with this unit, the disc to be played can be selected by first pressing this button and then pressing the appropriate numeric button (1 – 5).

PROGRAM MODE
Press this button to select the desired play mode.
("PROGRAM" or "CONTINUE")

|◀◀ SKIP ▶▶|
Press one of these buttons briefly to move the pick-up to the beginning of a specific track.

▶ PLAY
Press this button to start play.

■ STOP
Press this button to stop play.

Note:
When operating a compact disc player with a remote control sensor, face this remote control transmitter toward the remote control sensor of the compact disc player.

D Amplifier controls

VCR 1
Press this button to select the "VCR 1" input selector on the main unit.

MUTING
Press this button to temporarily reduce the volume level.
The volume level is attenuated by 20 dB (approx. 1/10).
Press once again to return to the previous volume level.

▼ VOLUME ▲
Press one of these buttons to adjust the volume level.

■ DISASSEMBLY INSTRUCTIONS

"ATTENTION SERVICER"
Some chassis components may have sharp edges. Be careful when disassembling and servicing.

Ref. No. 1	Removal of the cabinet
Procedure 1	

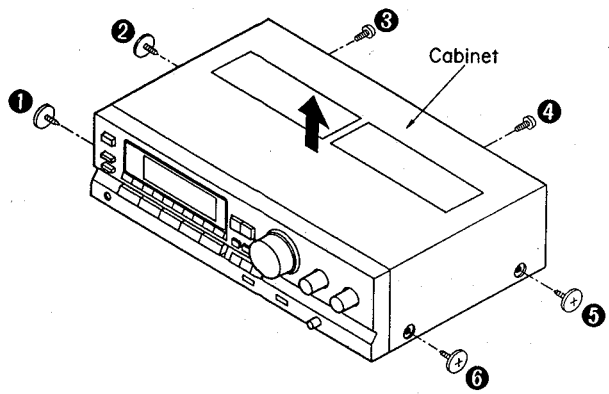

• Remove the 6 screws (❶~❻).

Ref. No. 3	Removal of the speaker switch/headphones jack P.C.B.
Procedure 1→2→3	

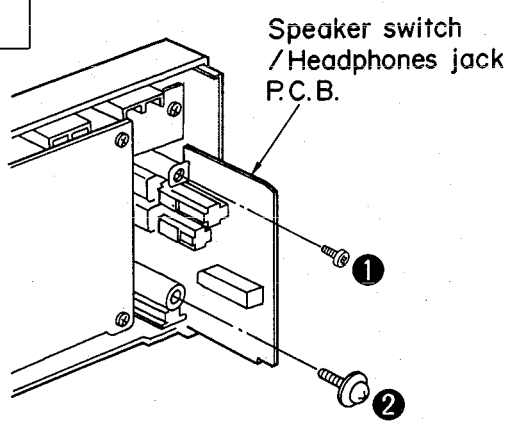

• Remove the 2 screws (❶, ❷).

Ref. No. 2	Removal of the front panel ass'y
Procedure 1→2	

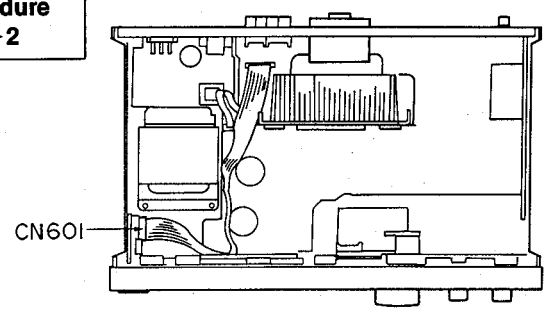

1. Remove the 1 flat cable (CN601).

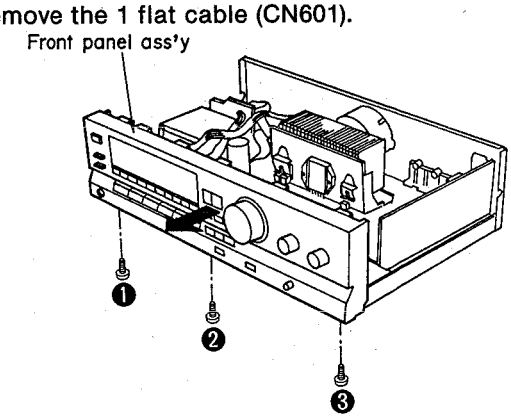

2. Remove the 3 screws (❶~❸).
3. Remove the front panel ass'y in the direction of arrow.

How to remove the flat cable

1. Lift up the connector.
2. Pull out the flat cable.

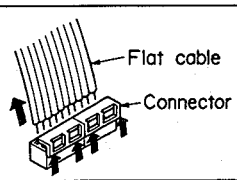

Ref. No. 4	Removal of the tone control P.C.B.
Procedure 1→2→4	

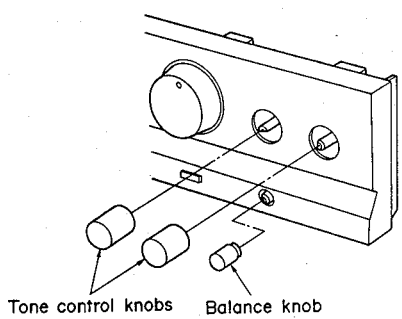

1. Remove the 2 tone control knobs and a balance knob.

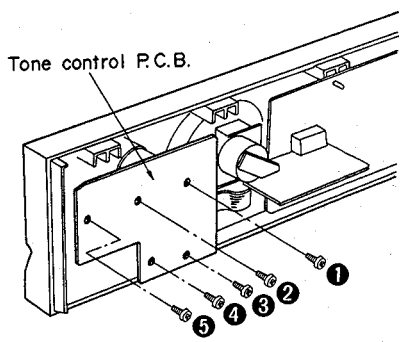

2. Remove the 5 screws (❶~❺).

Ref. No. 5	Removal of the volume P.C.B.
Procedure 1→2→5	

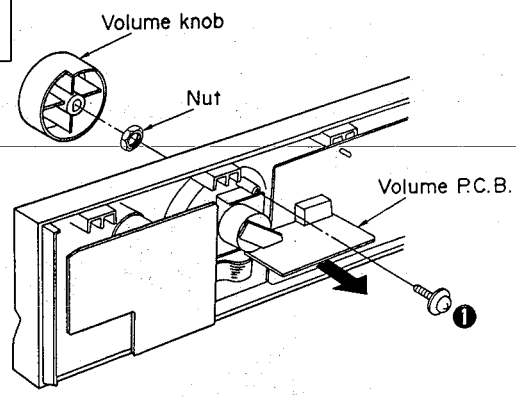

1. Pull out the volume knob.
2. Remove the nut.
3. Remove the 1 screw (❶).
4. Remove the volume P.C.B. in the direction of arrow.

Ref. No. 6	Removal of the FL drive P.C.B.
Procedure 1→2→5→6	

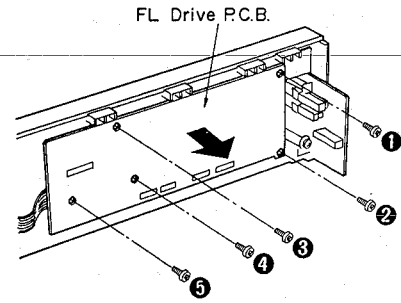

1. Remove the 5 screws (❶~❺).
2. Remove the FL drive P.C.B. in the direction of arrow.

Ref. No. 7	Removal of the power switch P.C.B. and Operation P.C.B.
Procedure 1→2→5→6 →7	

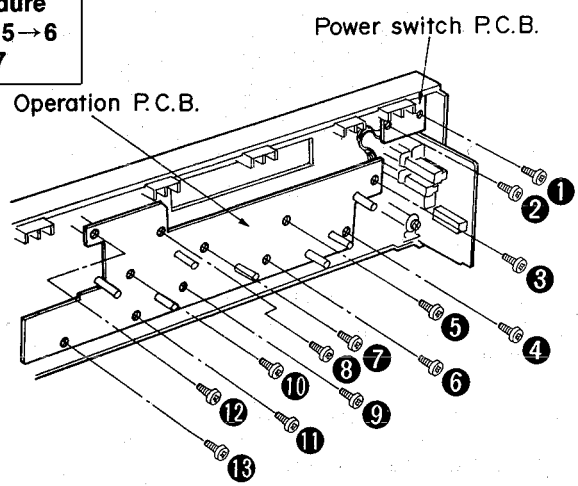

• Remove the 13 screws (❶~⓭).

Ref. No. 8	Removal of the rear panel
Procedure 1→8	

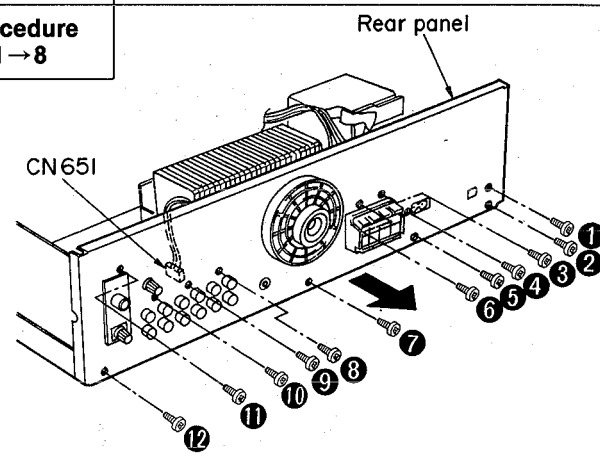

1. Remove the 12 screws (❶~⓬).
2. Remove the 1 connector (CN651).
3. Remove the rear panel in the direction of arrow.

Ref. No. 9	Removal of the tuner P.C.B.
Procedure 1→8→9	

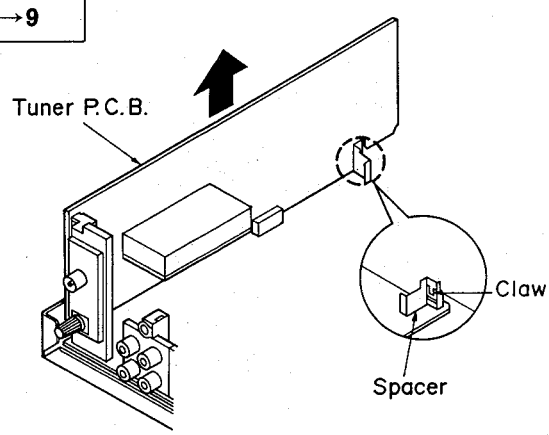

1. Release the 1 claw.
2. Remove the tuner P.C.B. in the direction of arrow.

Ref. No. 10	Removal of the power supply P.C.B.
Procedure 1→8→10	

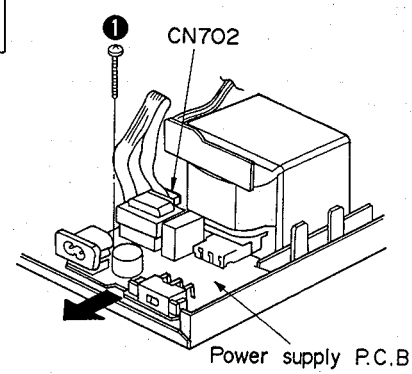

1. Remove the 1 screw (❶).
2. Remove the 1 flat cable (CN702).
3. Remove the power supply P.C.B. in the direction of arrow.

Ref. No. 11	Removal of the power transformer (main)

Procedure
1→8→10→11

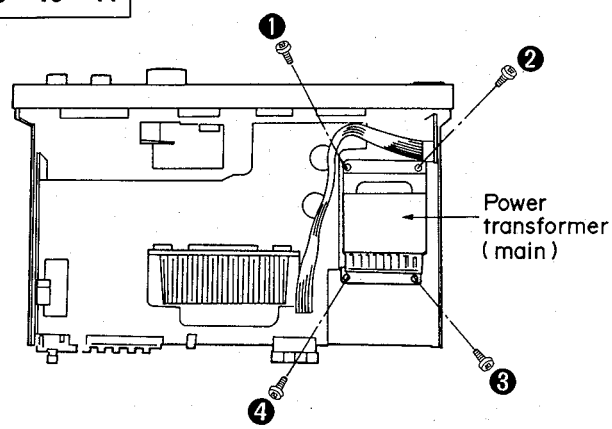

- Remove the 4 screws (❶~❹).

Ref. No. 12	Removal of the main P.C.B.

Procedure
1→2→8→9→12

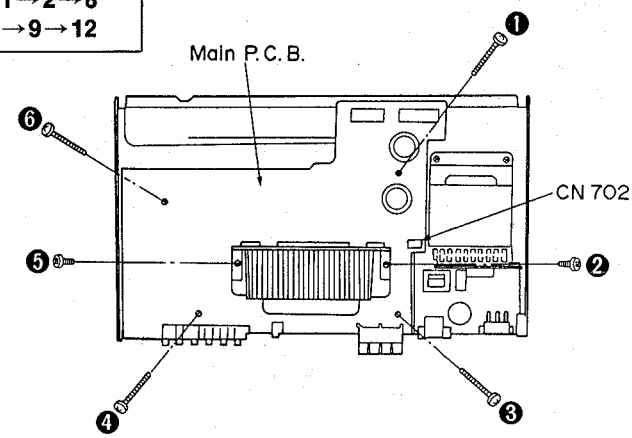

1. Remove the 1 flat cable (CN702).
2. Remove the 6 screws (❶~❻).

Ref. No. 13	Removal of the power IC

Procedure
1→2→8→9→12→13

1. Remove the 2 screws (❶, ❷).
2. Unsoder the power IC.

- **When mounting the power IC.**
  Apply silicone thermal compound (RFKX0002 or equivalent) to the rear of the power IC.

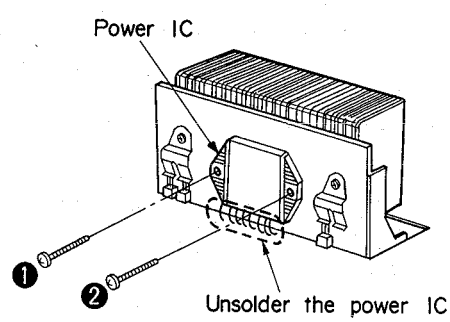

Ref. No. 14	Removal of the regulator transistor

Procedure
1→2→14

1. Remove the 2 screws (❶, ❷).
2. Remove the 2 transistor holders.
3. Lift up the connector in the direction of arrow ①.
4. Remove the regulator transistor in the direction of arrow ②.

- **When mounting the regulator transistor.**
  Apply silicone thermal compound (RFKX0002 or equivalent) to the rear of the regulator transistor.

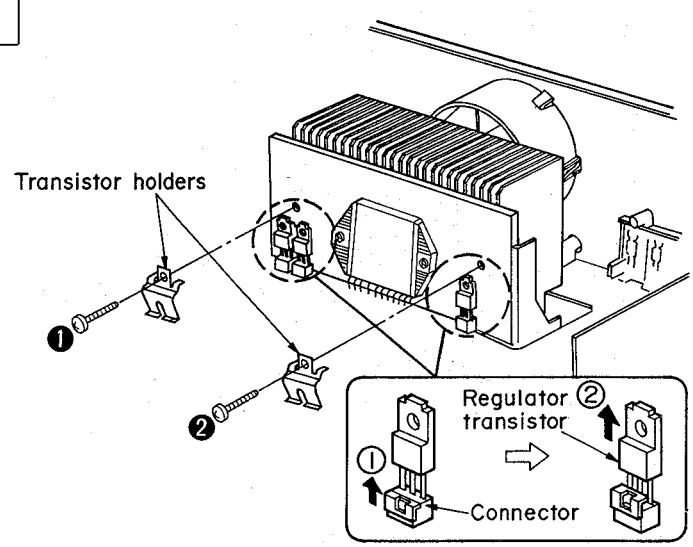

Ref. No. 15	Removal of the cooling fan motor
Procedure 1→8→15	

1. Release the 3 claws in the direction of arrow and remove the fan motor. (Refer to Fig. 1)
2. Insert a screwdriver at the root of the cooling fan. Force it out of the motor shaft. (Refer to Fig. 2)

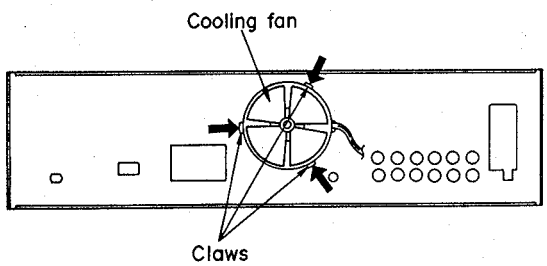

Fig. 1

3. Remove the motor cover by used ⊖ screwdriver. (Refer to Fig. 3)
4. Remove the motor from the fancasing. (Refer to Fig. 4)
5. When mounting the motor fan, align the fan casing's projection with the hole of the fan motor.

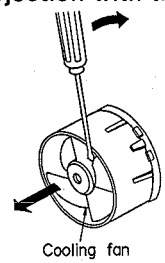

Fig. 2

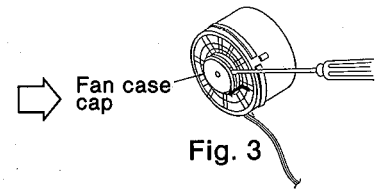

Fig. 3

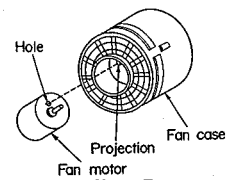

Fig. 5

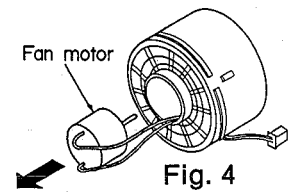

Fig. 4

Ref. No. 16	Check of the main P.C.B.
Procedure 1→16	• When checking the soldered surfaces of main P.C.B. and replacing the parts, do as show.

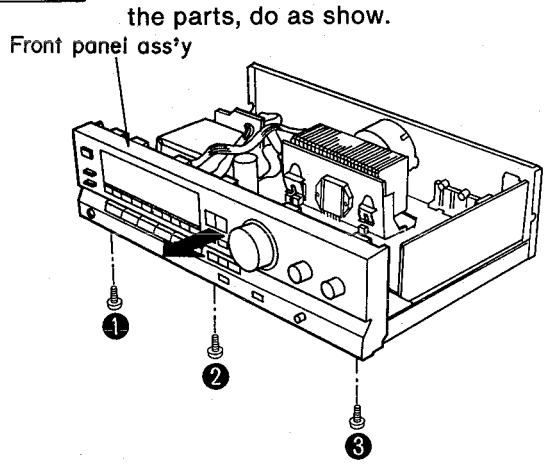

1. Remove the 3 screws (❶~❸).

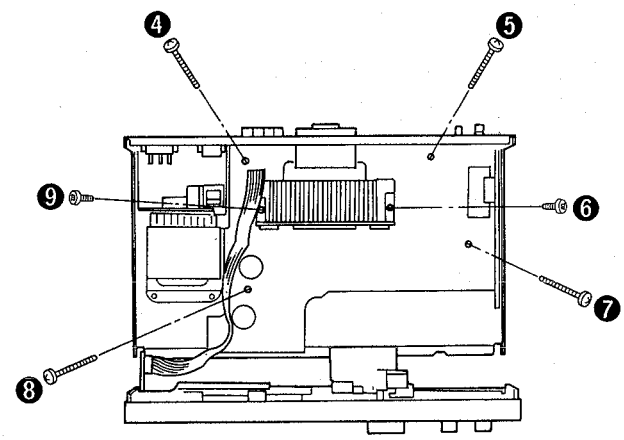

2. Remove the 6 screws (❹~❾).

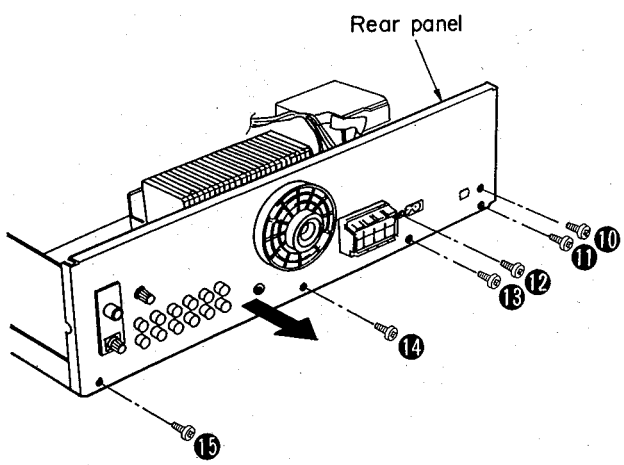

3. Remove the 6 screws (❿~⓯).
4. Remove the rear panel in the direction of arrow.

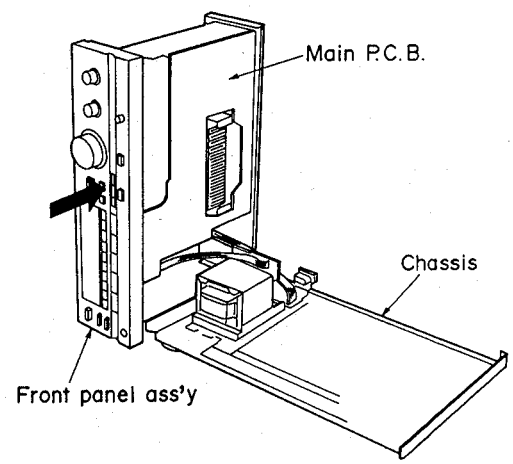

5. Remove the chassis.
6. Reinstall the front panel ass'y to the main P.C.B.

■ MEASUREMENTS AND ADJUSTMENTS

Note: For Z251 (AM (MW/LW) ANT and OSC coil), Z202 (AM (MW/LW)-IFT), they are supplied as adjusted parts. So, do not turn the cores of the parts. It is not necessary to adjust the AM (MW/LW) circuit.

• FM ADJUSTMENT

Control positions and equipment used

- FM signal generator (FM-SG).
- Distortion analyser
- DC electronic voltmeter (DC EVM)
- Frequency counter
- Choke coil (100μH)
- Resistor (100kΩ)

FM MONO DISTORTION ADJUSTMENT

1. Test equipment connection is shown in figure.
2. Set the unit to "**FM**" position.
3. Set the radio frequency display and signal generator to **100.10MHz**.
4. Adjust **T201** core so that voltage measured in signal mode is **0mV** (0±20mV) in **300mV** range.
5. Adjust **T202** so that the distortion factor of Lch is minimized.
6. Repeat step 4 and 5 a few times.
7. Make sure that the distortion factors of Lch and Rch are nearly the same with each other to minimum.

Note:

The adjusting screwdriver used should be made of resin.

FM SIGNAL GENERATOR CONDITION
Modulation.....100%
Modulation frequency.....1kHz (MONO)
Output level.....66dB

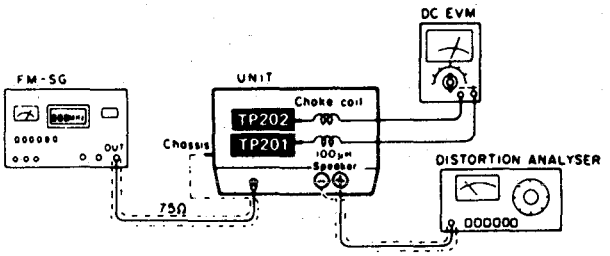

FM MPX VCO ADJUSTMENT

1. Test equipment connection is shown in figure.
2. Set the unit to "**FM auto**" position.
3. Set the radio frequency display and signal generator to **100.10MHz**.
4. Adjust **VR301** for **19.00±0.03kHz** on frequency counter reading.

★ USING ALTERNATE SYSTEM

1. Apply stereo signal from generator or receive the stereo broadcast.
2. Adjust **VR301** until stereo indicator lights up. Cement arm of **VR301** as shown in figure.

FM SIGNAL GENERATOR CONDITION
Modulation.....0% (non-modulation)
Output level.....66dB

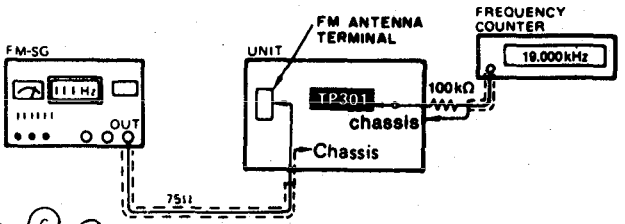

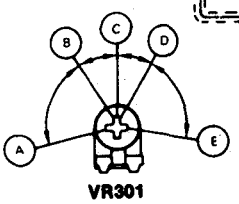

Ⓐ – Ⓑ Ⓓ – Ⓔ : Stereo OFF position
Ⓑ – Ⓓ : Stereo ON position (indicator lighting)
Ⓒ: Adjust point of Pilot circuit

• Adjustment points

Please refer to tuner P.C.B. on page 28.

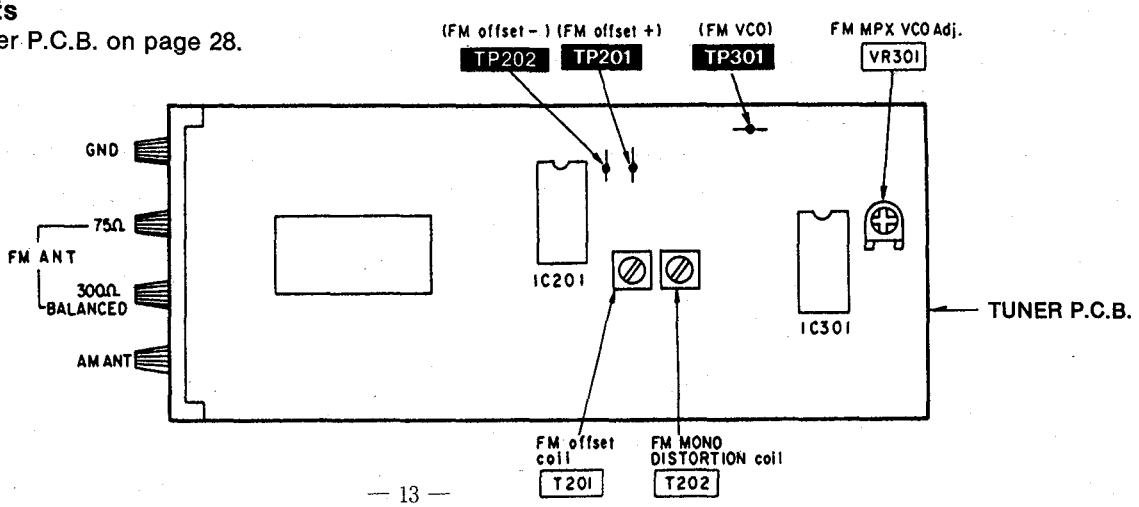

■ TERMINAL FUNCTION OF IC

• IC901 (MN187125STV): Microcomputer

Pin No.	Mark	I/O Division	Function
1 ~ 7	S0 ~ S6	O	Segment signal to FL display
8	Vpp	I	Power supply terminal to FL display
9	Vdd	I	Power supply terminal
10	OSC2	O	Crystal oscillator terminal (4.19MHz)
11	OSC1	I	
12	Vss	—	GND terminal
13	XI	—	Not used, connected to GND
14	XO	—	Not used, open
15	KEY2	I	Key return signal
16	KEY1		
17	SD	I	Received signal detect terminal
18	FM ST	I	Stereo signal detect terminal
19	F	O	Sense of rotation for volume motor control terminal
20	R		
21	5-6	—	Not used, open
22	ST3	—	Level shift control terminal Not used, connected to resister.
23	REMOTE	I	Remote control terminal
24	HOLD	I	Service interruption detect terminal
25	ST1	O	Level shift control terminal
26	OFF	—	Not used, connected to GND
27	RLY	O	Relay control terminal
28	ST2	—	Level shift control terminal Not used, connected to resister.
29	RESET	I	Reset detect terminal
30	CK1	O	Serial clock signal

Pin No.	Mark	I/O Division	Function
31	CE	O	Chip enable terminal
32	DATA1	O	Serial data signal
33	CK2	—	Serial clock signal Not used, open
34	DATA2	—	Serial data signal Not used, open
35	DAC STOP/ VIDEO SELECT	—	Video selector control terminal Not used, connected to resister.
36	SYNC	—	Not used, open
37	CM	—	Not used, connected to GND
38	3ST	—	Not used, connected to resistor
39	FM mono	O	Forcible monaural signal
40	RFM	O	Muting control to tuner circuit
41	A	—	Rotary tuning control terminal Not used, connected to resister.
42	B		
43 ~ 45	KS1 ~ KS3	O	Key scan signal
46 ~ 53	DGT0 ~ DGT7	O	Digit signal to FL display
54	INITIAL	I	Serial data detect terminal
55	DAC/SUR	—	Muting control signal Not used, connected to resister.
56	LOU	O	Loudness control signal
57	AFM	O	Muting control to amplifier circuit
58	−20dB	O	Muting control (−20dB) to amplifier circuit
59 ~ 64	S7 ~ S12	O	Segment signal to FL display

■ INTERNAL CONNECTION OF FL

• Grid connection diagram

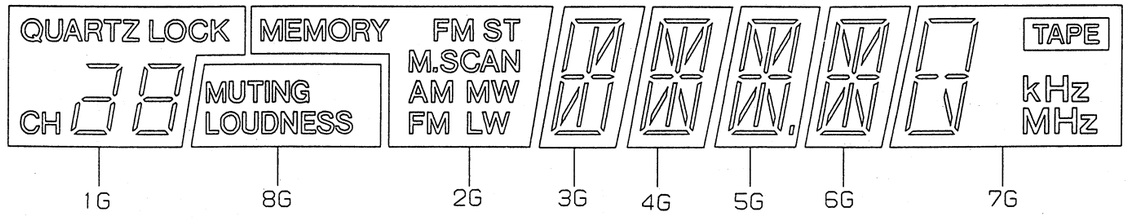

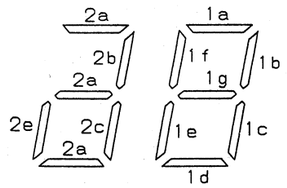

(1G)

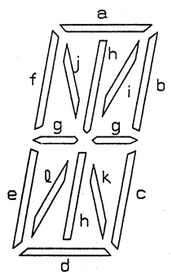

(7G~3G)

• Anode connection table

	1G	2G	3G	4G	5G	6G	7G	8G
P1	1a	–	a	a	a	a	a	–
P 2	2b	–	i, ℓ	j	j	j	–	–
P 3	2c	AM	h	h	h	h	TAPE	–
P 4	2a	MW	–	i	i	i	–	–
P 5	1f	FM	f	f	f	f	f	–
P 6	1b	LW	b	b	b	b	b	–
P 7	1g	–	g	g	g	g	g	–
P 8	1e	–	e	e	e	e	e	–
P 9	1c	M.SCAN	c	c	c	c	c	MUTING
P10	2e	MEMORY	–	ℓ	ℓ	ℓ	kHz	LOUDNESS
P11	1d	–	d	d	d	d	d	–
P12	QUARTZ LOCK	–	–	k	k	k	k	–
P13	CH	FM ST	–	–	▯	–	MHz	–

• Pin connection

PIN NO.	39	38	37	36	35	34	33	32	31	30	29	28	27	26	25	24	23	22	21	20	19	18	17	16	15	14	13	12	11	10	9	8	7	6	5	4	3	2	1
CONNECTION	F2	F2	NP	NP	NC	1G	2G	3G	4G	5G	6G	7G	8G	NC	P13	P12	P11	P10	P9	P8	P7	P6	P5	P4	P3	P2	P1	NC	NC	NC	NC	NC	NC	NC	NC	NP	NP	F1	F1

NOTE 1) F1,F2 --- Filament
2) NP ------ No pin
3) NC ------ No connection
4) 1G~8G --- Grid

■ BLOCK DIAGRAM

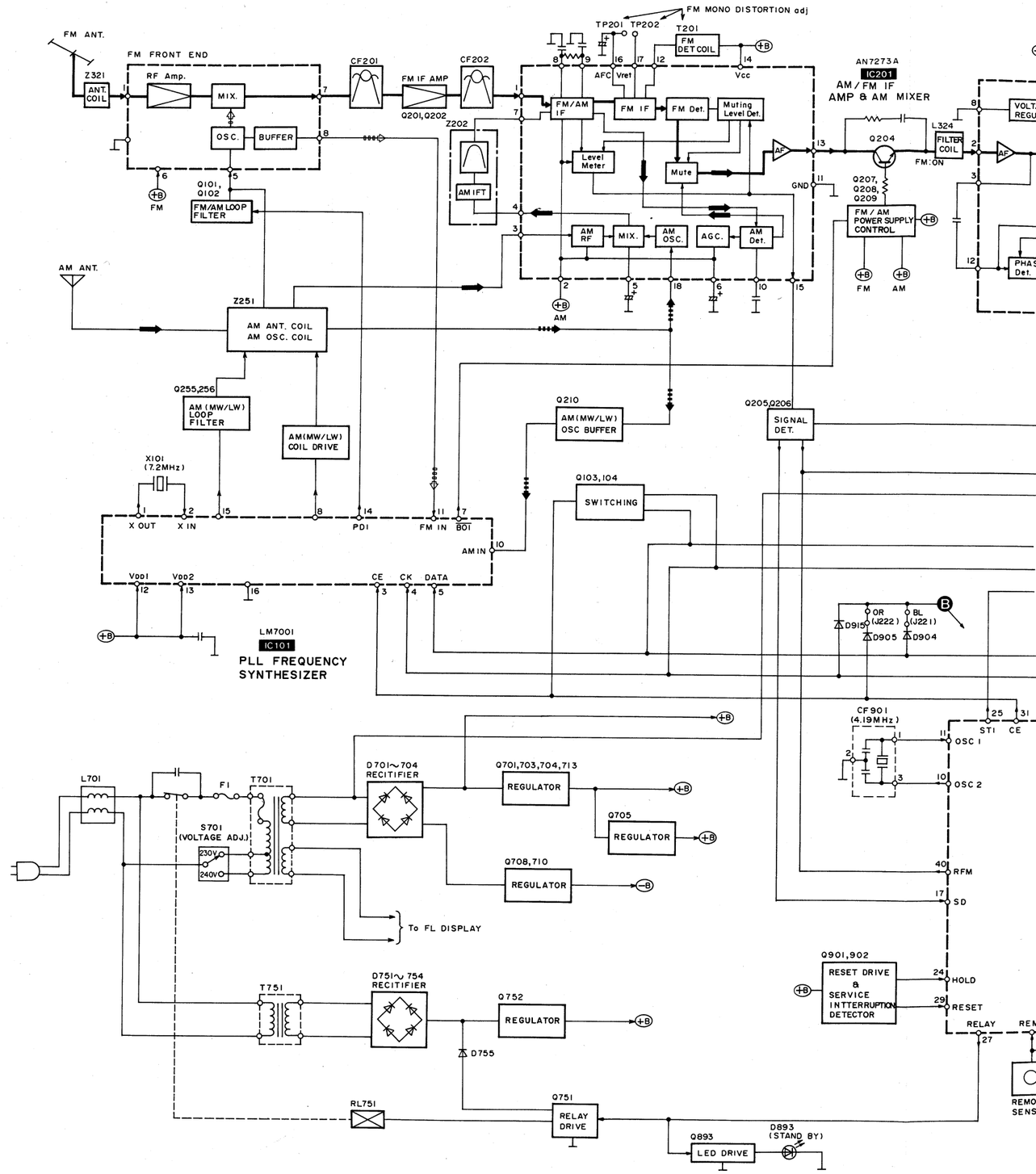

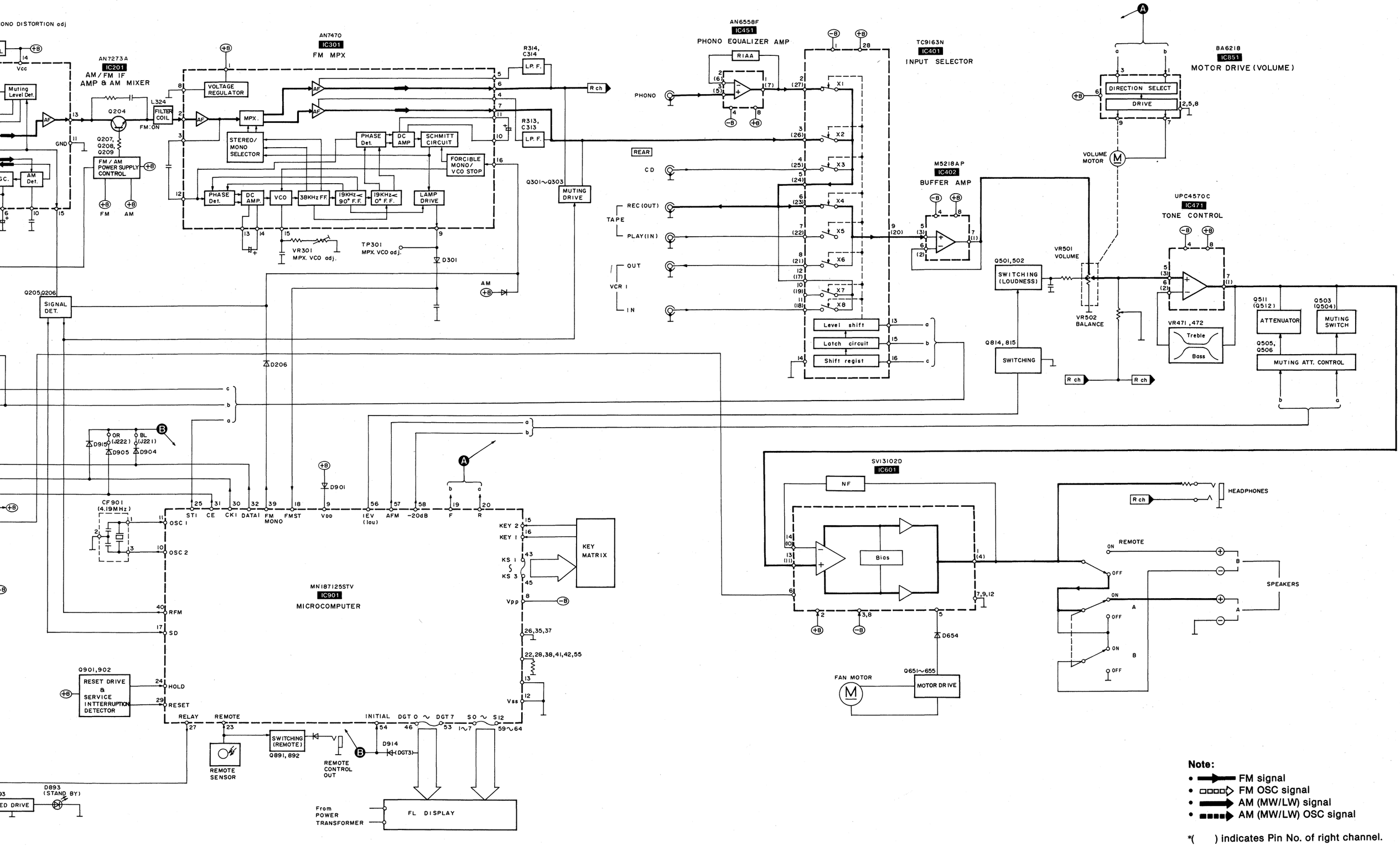

Note:

- FM signal
- FM OSC signal
- AM (MW/LW) signal
- AM (MW/LW) OSC signal

*( ) indicates Pin No. of right channel.

SCHEMATIC DIAGRAM (This schematic diagram may be modified at any time with the development of new technology.)

(Parts list on pages 36~40)

Note 1:

- S601 : Speaker selectors (SPEAKERS) switches. [S601-1: A, S601-2: B]
- S701 : Voltage adjust switch.
- S901~910 : Preset-tuning (1-0) (30 CHANNEL RANDOM PRESET TUNING) switches. [S901: 1, S902: 2, S903: 3, S904: 4, S905: 5, S906: 6, S907: 7, S908: 8, S909: 9, S910: 0]
- S914 : Power (POWER) switch.
- S916, 917, 922, 923 : Input selector switches. [S916: PHONO, S917: TUNER, S922: VCR 1, S923: CD]
- S918 : Tape monitor (TAPE MONITOR/VCR 2) switch.
- S925 : Loudness (LOUDNESS) switch.
- S929, 936 : Tuning (TUNING) switches. [S929: DOWN, S936: UP]
- S930~932 : Band selector switches. [S930: FM, S931: LW, S932: MW]
- S933 : FM mode selector (FM MODE) switch.
- S934 : Memory scan (MEMORY SCAN) switch.
- S935 : Memory (MEMORY) switch.

- Signal line
  - : FM OSC signal
  - : AM (MW/LW) OSC signal
  - : Phono signal
  - : Positive voltage lines
  - : Negative voltage lines
  - : FM signal
  - : AM (MW/LW) signal
  - : AF signal (Lch)
- Important safety notice:
  Components identified by ⚠ mark have special characteristics important for safety. When replacing any of these components, use only manufacturer's specified parts. Indicated voltage values are standard values for the unit measured by the DC electronic circuit tester (high-impedance) with the chassis taken as standard. Therefore, there may exist some errors in the voltage values, depending on internal impedance of the DC circuit tester.
- All voltage values shown in circuitry are DC voltage in FM signal (Stereo signal) reception mode.

∗Figures in ( ) Stand for DC-voltage in AM signal reception mode.

- The supply part number is described alone in the replacement parts list.

Ref. No.	Production Part No.	Supply Part No.
IC301	AN7470	SVIUPC1161C3
Z891	RCDHC-677-E	RCDHC-677

∗**Caution!**

IC and LSI are sensitive to static electricity. Secondary trouble can be prevented by taking care during repair.

∗Cover the parts boxes made of plastics with alminum foil.

∗Ground the soldering iron.

∗Put a conductive mat on the work table.

∗Do not touch the legs of IC or LSI with the fingers directly.

Note 2:

- **Use of ceramic filters in pairs**
  The ceramic filters (CF201, CF202) for FM-IF circuit are available in three ranks. For this circuit, be sure to use the ceramics of the same rank in a pair.
  At repairing and replacement, pay close attention to the short jumpers (BL, OR) for use as different short jumpers must be used depending on each rank of the ceramic filters.

Color marking (Blue, Red or Orange)

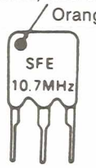

COLOUR (Rank)	BL (J221)	OR (J222)	CENTER FREQUENCY
Blue	○	×	10.675MHz
Red	○	○	10.700MHz
Orange	×	○	10.725MHz

Note: ○ mark: short jumper is used.
× mark: short jumper is not used.

TERMINAL GUIDE OF IC'S, TRANSISTORS AND DIODES

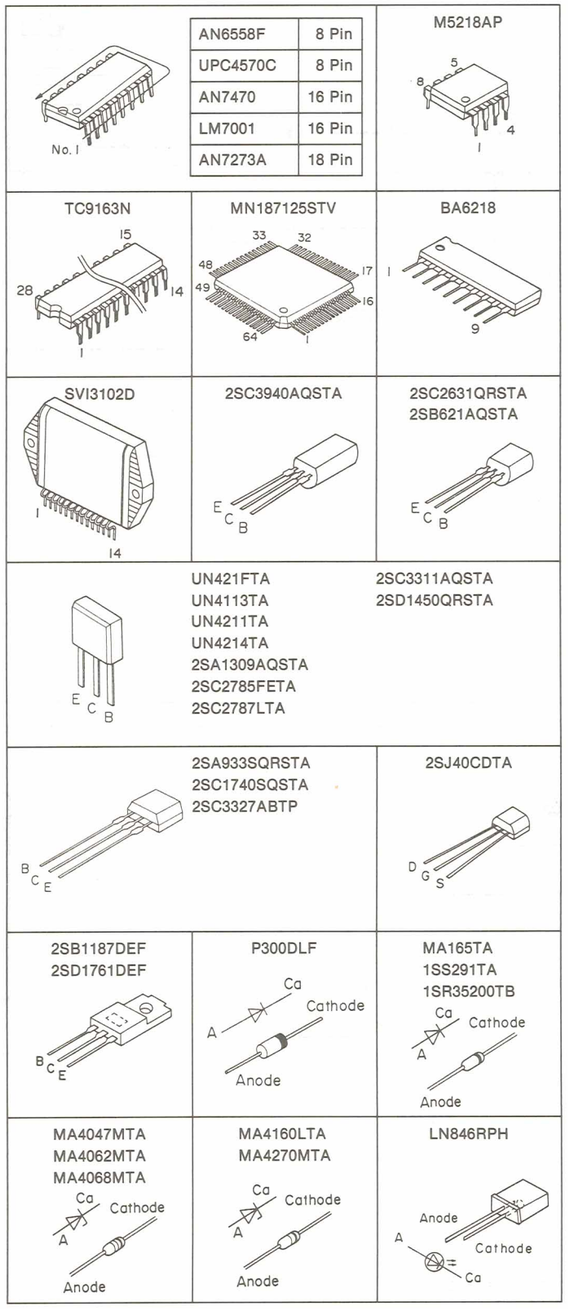

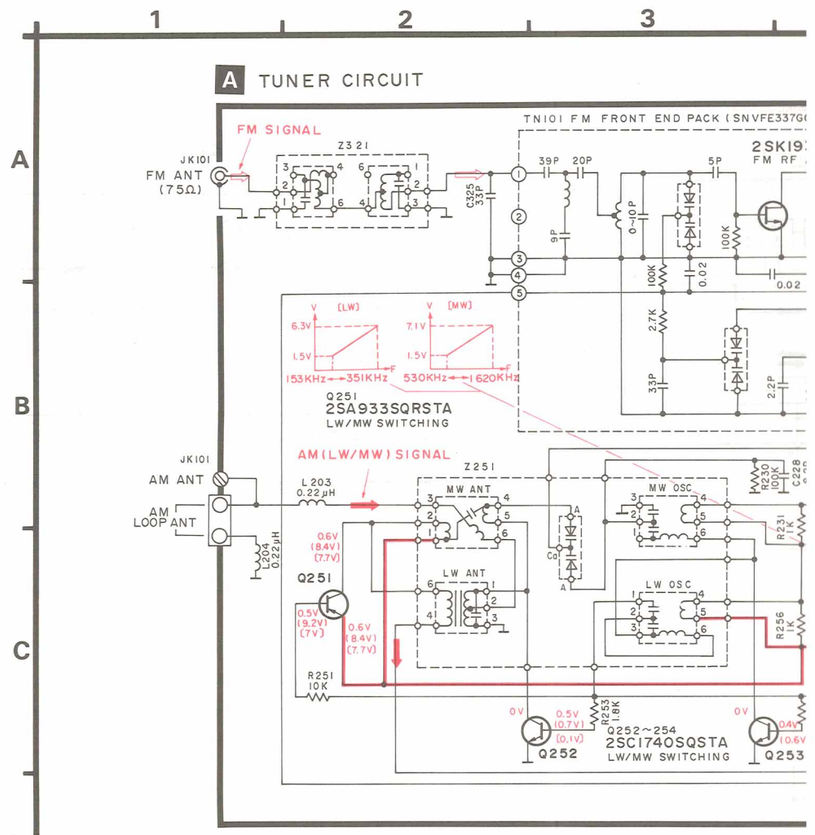

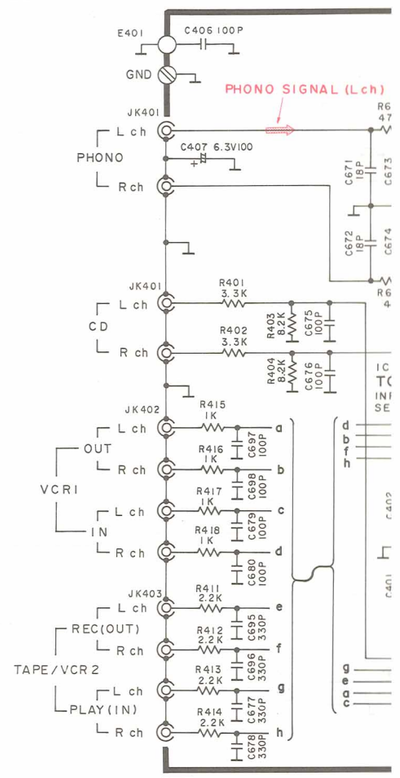

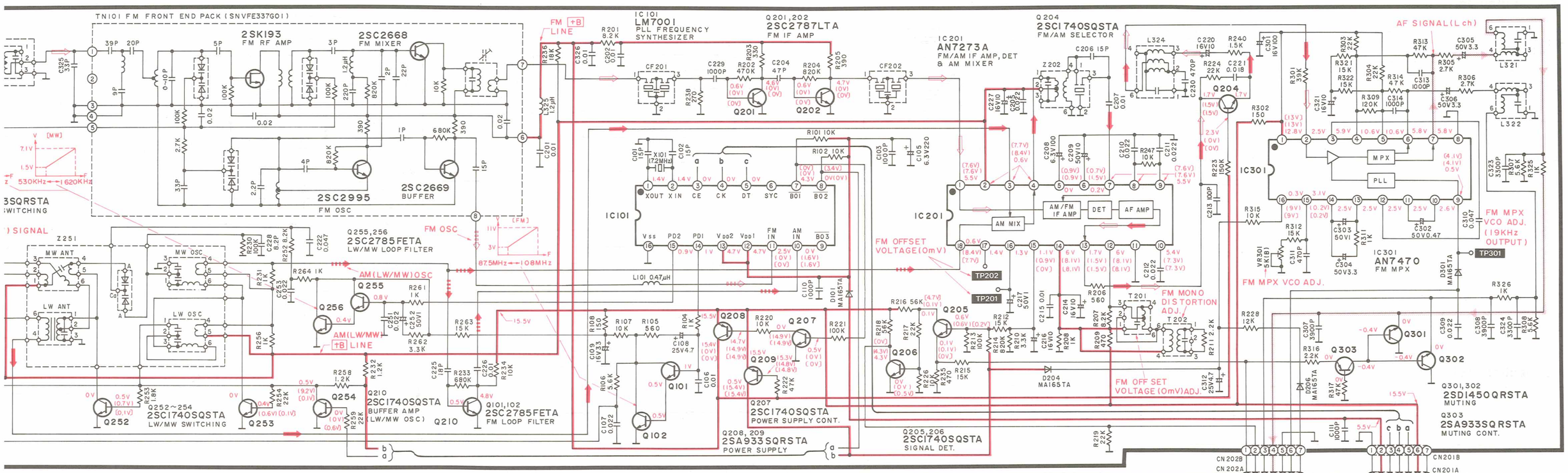

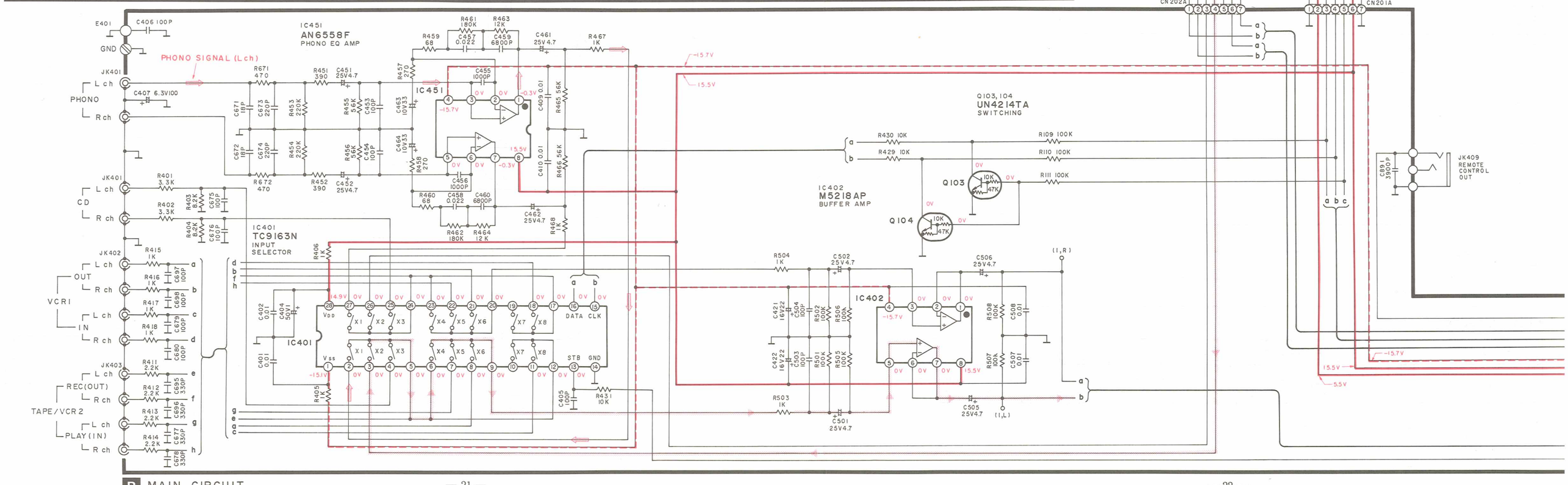

B MAIN CIRCUIT

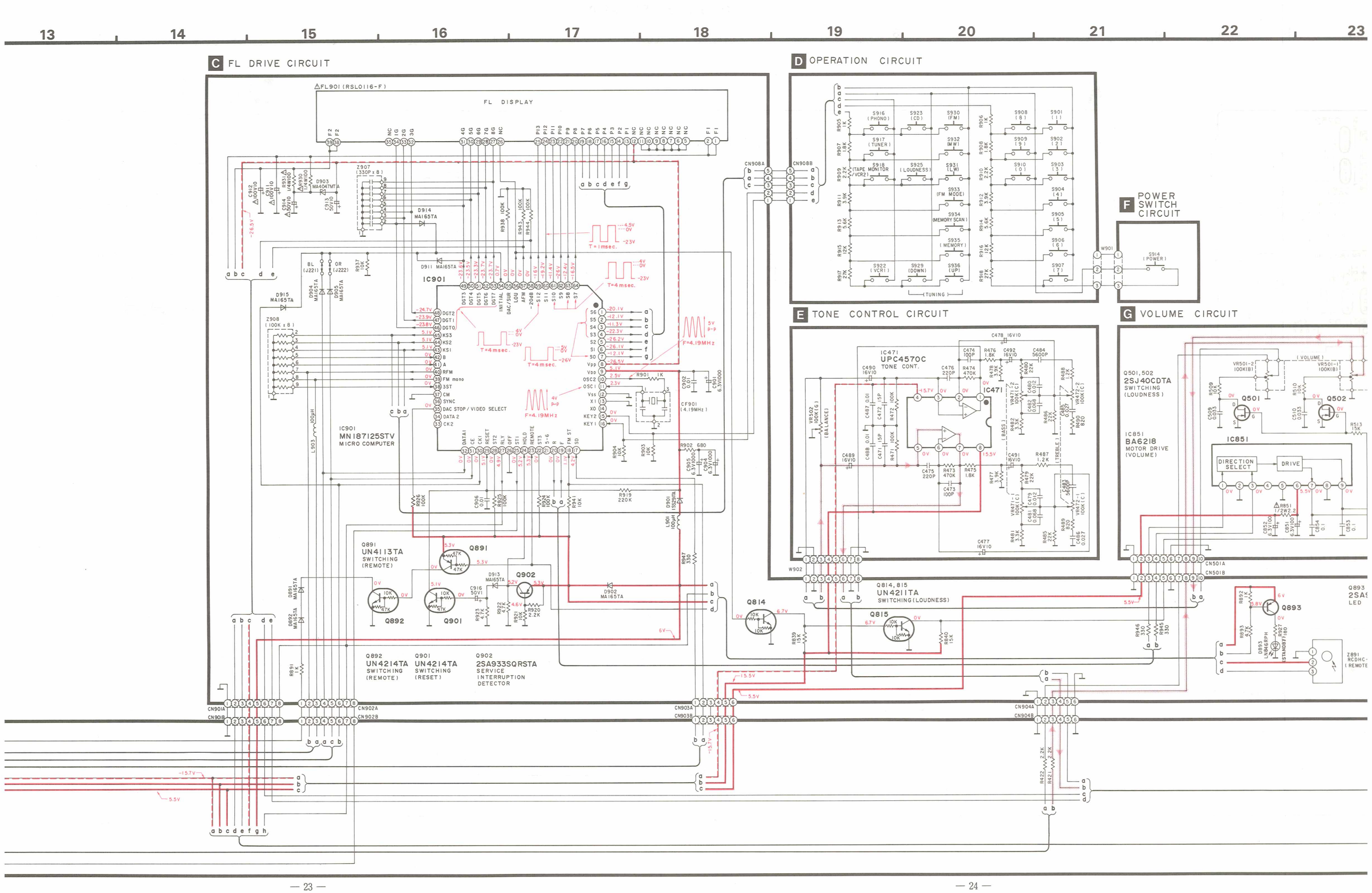
13
14
15
16
17
18
19
20
21
22
23
C FL DRIVE CIRCUIT
D OPERATION CIRCUIT
F POWER SWITCH CIRCUIT
E TONE CONTROL CIRCUIT
G VOLUME CIRCUIT
FL DISPLAY
IC901
IC901 MN187125STV MICRO COMPUTER
IC471 UPC4570C TONE CONT.
Q501, 502 2SJ40CDTA SWITCHING (LOUDNESS)
IC851 BA6218 MOTOR DRIVE (VOLUME)
Q891 UN4113TA SWITCHING (REMOTE)
Q892 UN4214TA SWITCHING (REMOTE)
Q901 UN4214TA SWITCHING (RESET)
Q902 2SA933SQRSTA SERVICE INTERRUPTION DETECTOR
Q814, 815 UN4211TA SWITCHING (LOUDNESS)
Q893 2SA9 LED
CN901A
CN901B
CN902A
CN902B
CN903A
CN903B
CN904A
CN904B
CN501A
CN501B
CN908A
CN908B
W901
W902

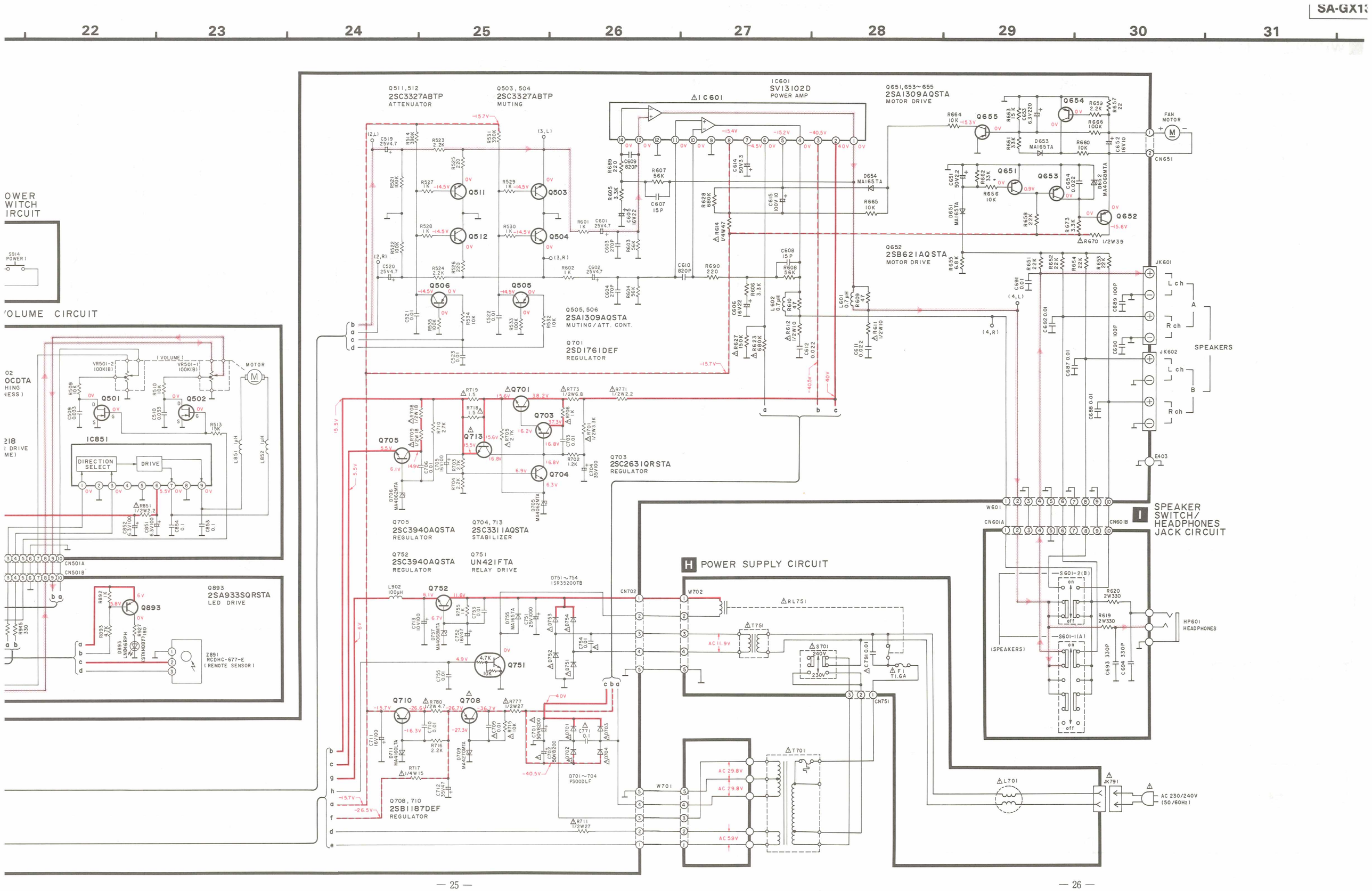
22
23
24
25
26
27
28
29
30
31
POWER SWITCH CIRCUIT
VOLUME CIRCUIT
Q511,512
2SC3327ABTP
ATTENUATOR
Q503, 504
2SC3327ABTP
MUTING
IC601
SV13102D
POWER AMP
Q651,653~655
2SA1309AQSTA
MOTOR DRIVE
Q652
2SB621AQSTA
MOTOR DRIVE
Q505, 506
2SA1309AQSTA
MUTING/ATT. CONT.
Q701
2SD1761DEF
REGULATOR
Q703
2SC2631QRSTA
REGULATOR
Q705
2SC3940AQSTA
REGULATOR
Q704, 713
2SC3311AQSTA
STABILIZER
Q752
2SC3940AQSTA
REGULATOR
Q751
UN421FTA
RELAY DRIVE
Q893
2SA933SQRSTA
LED DRIVE
Q708, 710
2SB1187DEF
REGULATOR
D701~704
P300DLF
D751~754
1SR35200TB
FAN MOTOR
SPEAKERS
SPEAKER SWITCH/ HEADPHONES JACK CIRCUIT
HP601 HEADPHONES
POWER SUPPLY CIRCUIT
AC 230/240V (50/60Hz)
Z891 RCDHC-677-E (REMOTE SENSOR)
IC851
DIRECTION SELECT
DRIVE
MOTOR

WIRING CONNECTION DIAGRAM

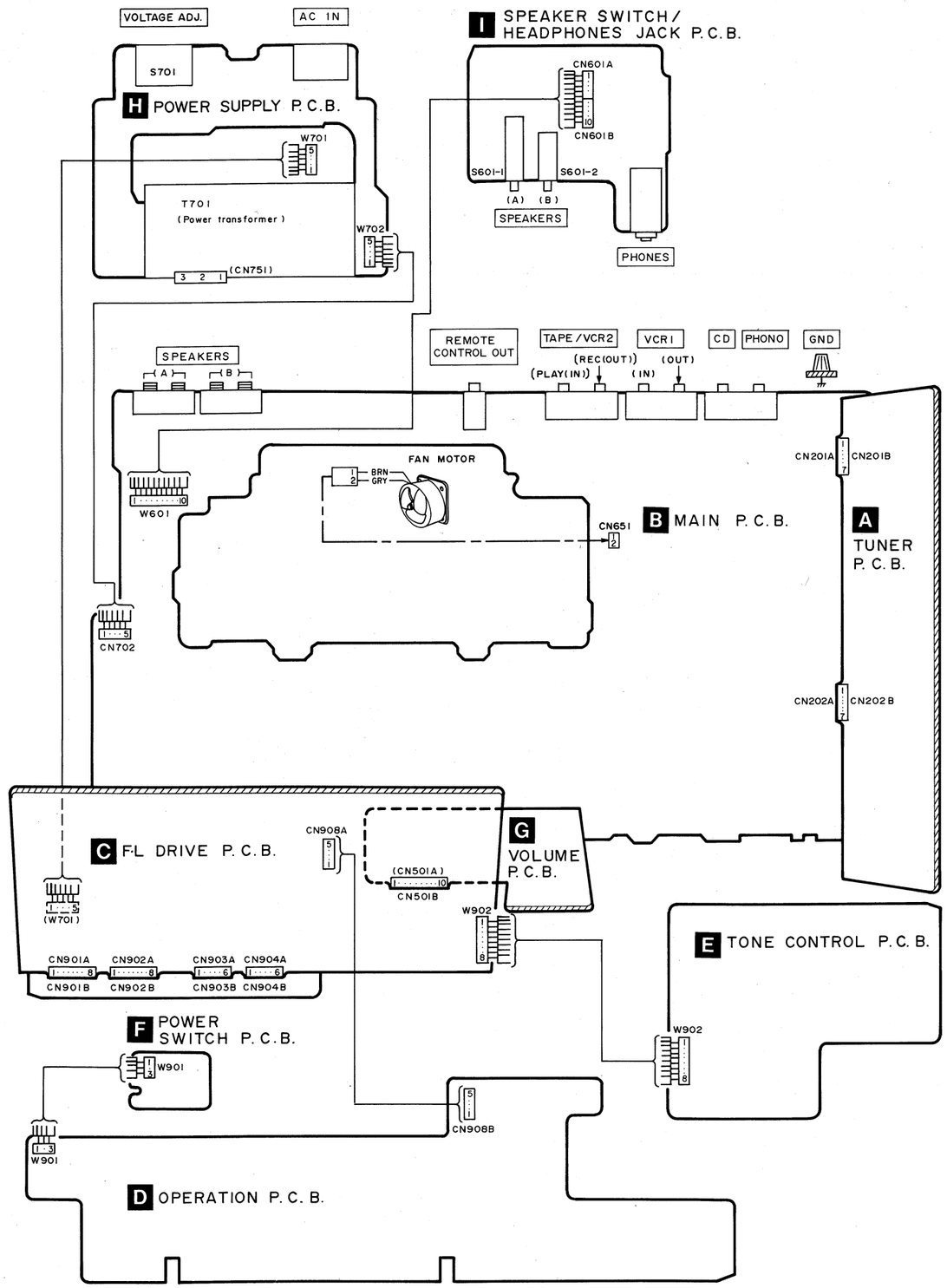

PRINTED CIRCUIT BOARDS

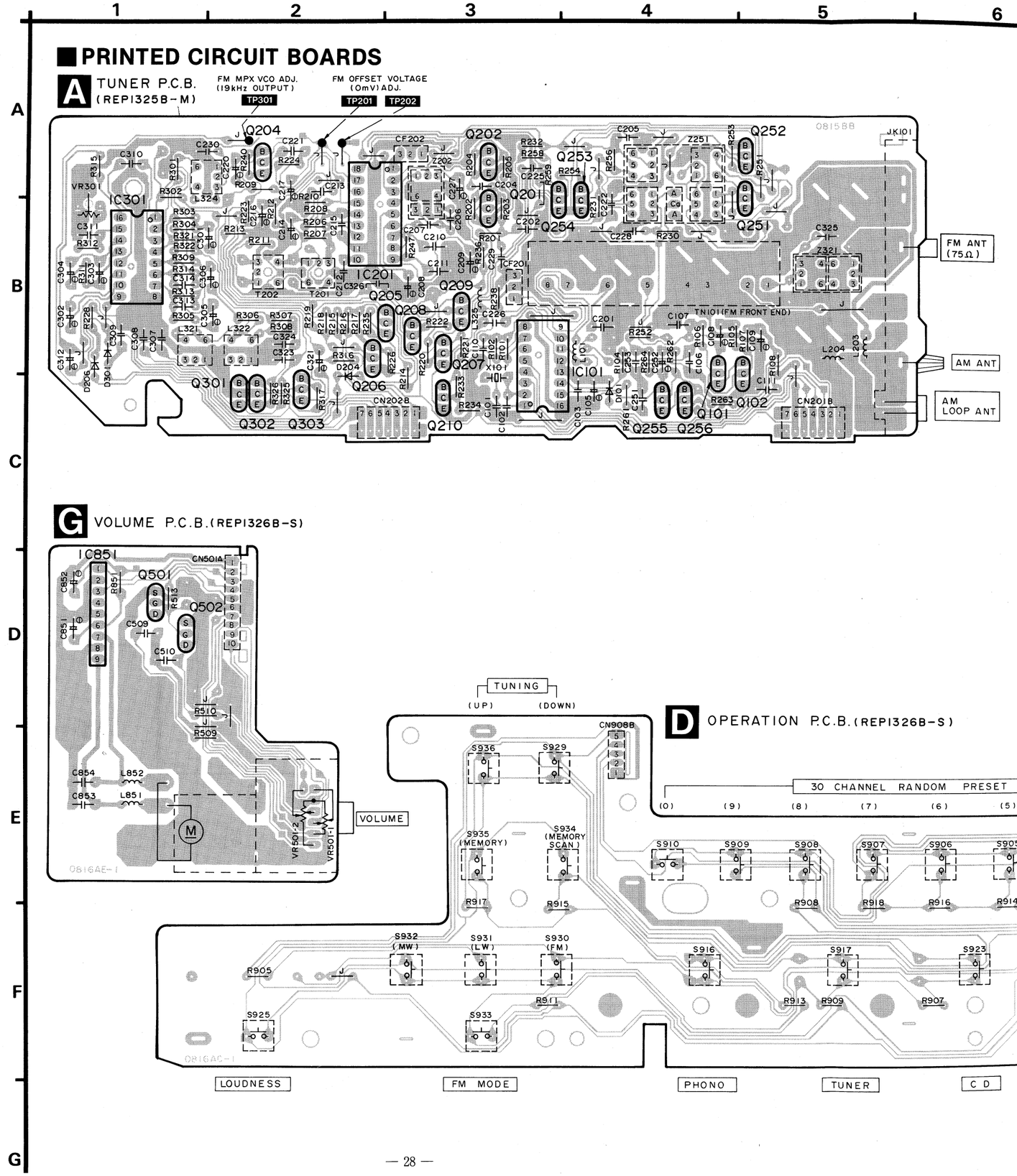

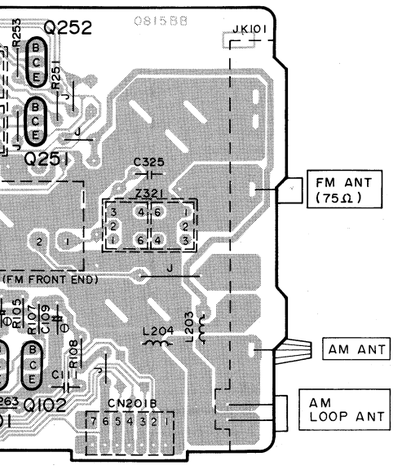

C FL DRIVE P.C.B. (REP1326B-S)

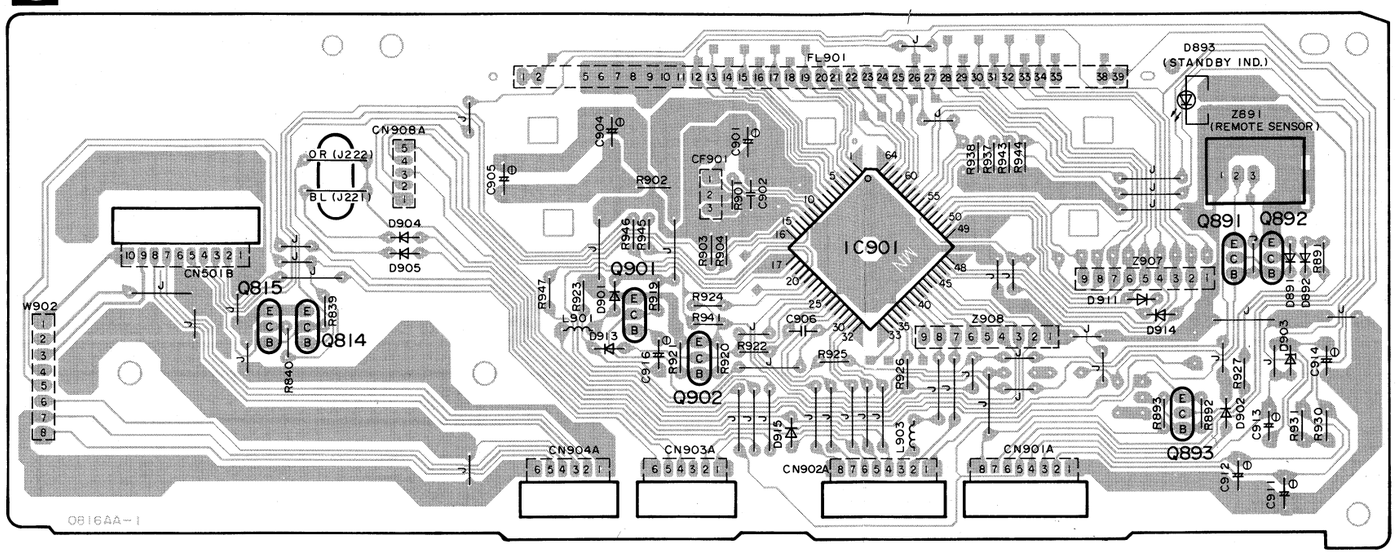

I SPEAKER SWITCH / HEADPHONES JACK P.C.B. (REP1326B-S)

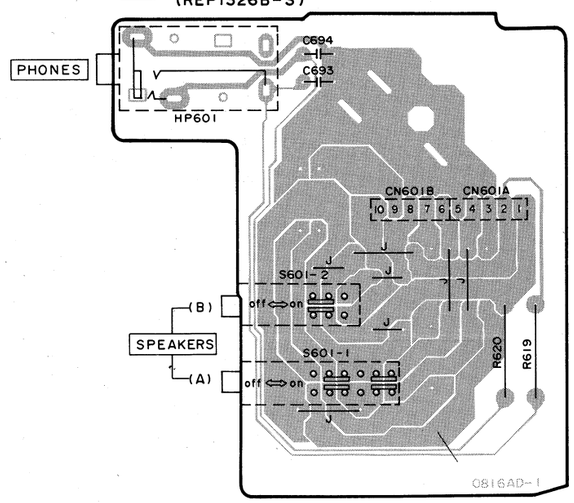

OPERATION P.C.B. (REP1326B-S)

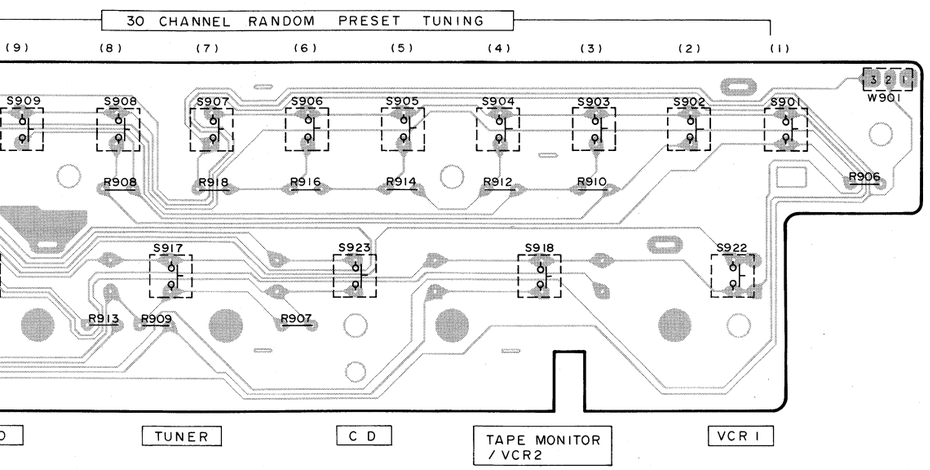

E TONE CONTROL P.C.B. (REP1326B-S)

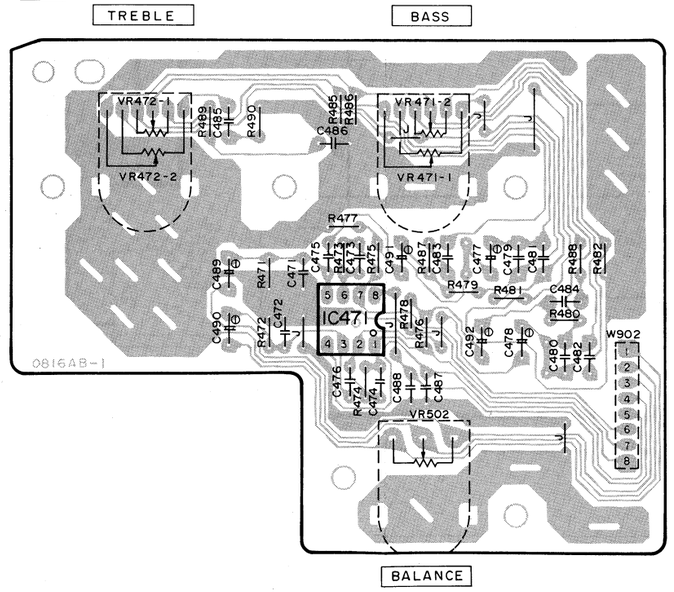

H POWER SUPPLY P.C.B. (REP1325B-M)

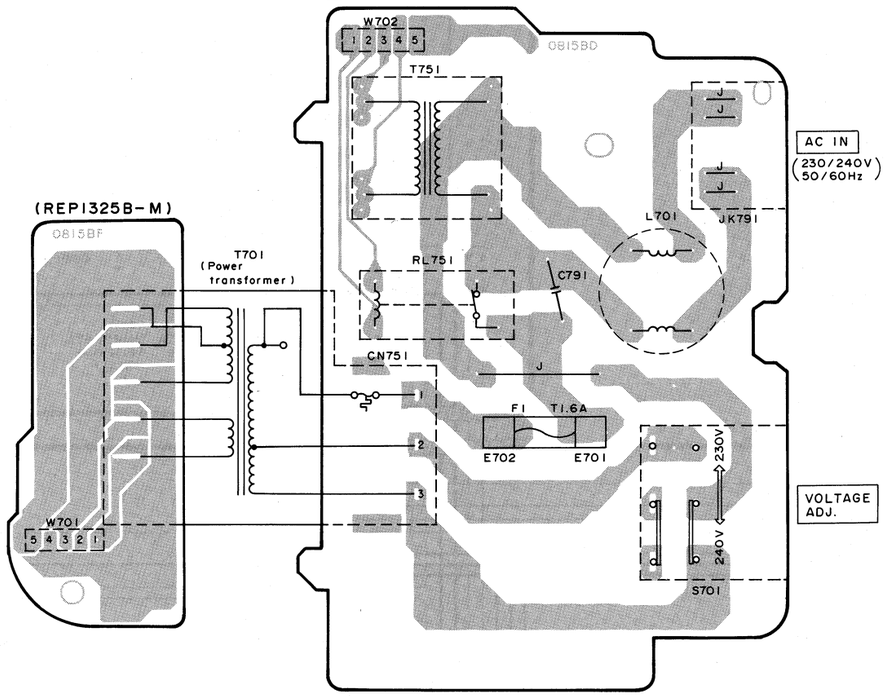

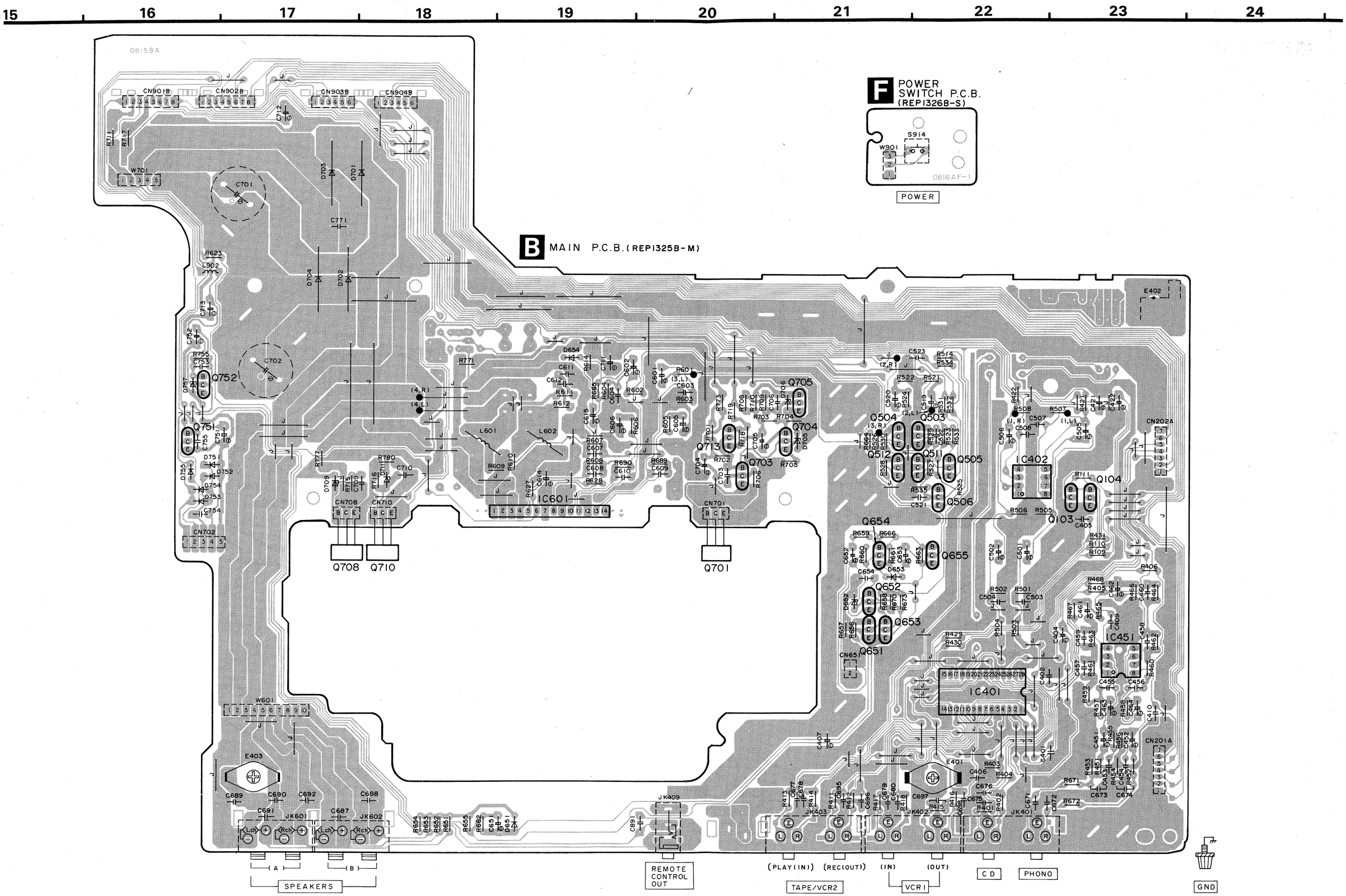
15
16
17
18
19
20
21
22
23
24
F POWER SWITCH P.C.B. (REP1326B-S)
S914
W901
POWER
B MAIN P.C.B. (REP1325B-M)
CN901B
CN902B
CN903B
CN904B
W701
C701
C702
C771
Q752
Q751
Q705
Q704
Q713
Q703
Q504
Q503
Q512
Q511
Q505
Q506
Q104
Q103
Q654
Q655
Q652
Q653
Q651
Q708
Q710
Q701
IC601
IC402
IC451
IC401
CN708
CN710
CN701
CN702
CN651
CN202A
CN201A
W601
E403
E402
E401
JK601
JK602
JK409
JK403
JK402
JK401
SPEAKERS
(A)
(B)
REMOTE CONTROL OUT
(PLAY(IN))
(REC(OUT))
TAPE/VCR2
(IN)
(OUT)
VCR1
CD
PHONO
GND

EXPLODED VIEWS

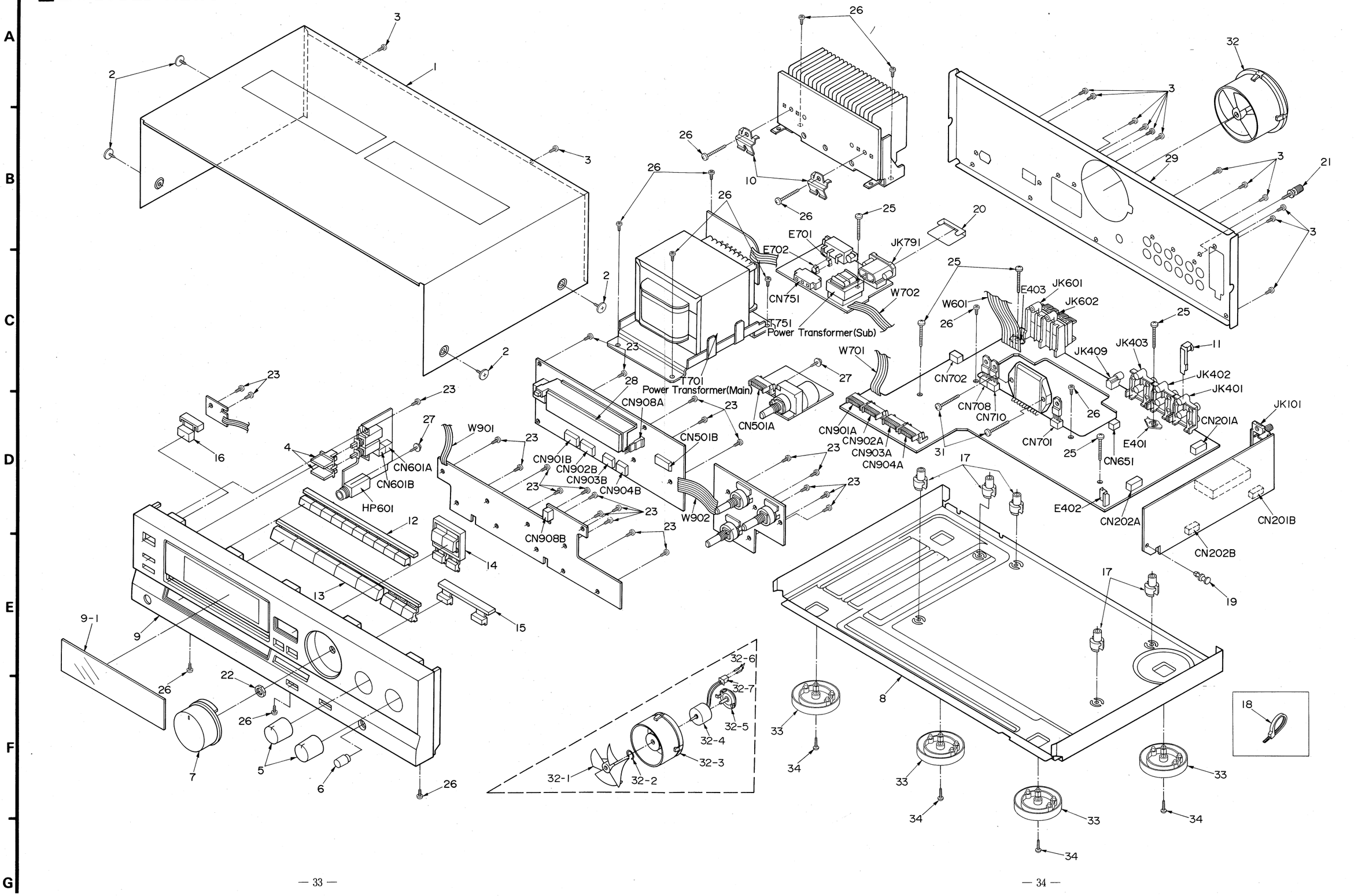

REPLACEMENT PARTS LIST

Notes: *Important safety notice:
Components identified by ⚠ mark have special characteristics important for safety.
Furthermore, special parts which have purposes of fire-retardant (resistors), high-quality sound (capacitors), low-noise (resistors), etc. are used.
When replacing any of components, be sure to use only manufacturer's specified parts shown in the parts list.
*The parenthesized indications in the Remarks columns specify the areas. (Refer to the cover page for area.)
Parts without these indications can be used for all areas.
*Remote Control Ass'y:
Supply period for three years from termination of production.

Ref. No.	Part No.	Part Name & Description	Remarks
		CABINET AND CHASSIS	
1	RKM0036B-K	CBINET	
2	SNE2129-3	SCREW	
3	XTBS3+8JFZ1	SCREW	
4	RGU0101	BUTTON, SPEAKERS	
5	RGW0072	KNOB, TONE CONTROLS	
6	RGW0073	KNOB, BALANCE	
7	RGW0084	KNOB, VOLUME	
8	RMK0035-4	CHASSIS	
9	RFKGAGX130EK	FRONT PANEL ASS' Y	
9-1	RKW0089C-Q	TRANSPARENT PANEL	
10	RMC0158	TRANSISTOR HOLDER	
11	RSC0105	SHIELD PLATE	
12	RGU0344A-K1	BUTTON, PRESET TUNING	
13	RGU0345E-K1	BUTTON, INPUT SELECTOR	
14	RGU0347-K1	BUTTON, TUNING	
15	RGU0348A-K1	BUTTON, MODE/LOUDNESS	
16	RGU0380	BUTTON, POWER	
17	SHE187-2	P. C. B. SUPPORT	
18	SHR301	FASTNER	
19	SHR8006	SPACER	
20	RMZ0204	AC INLET BARRIER	
21	SNE2123	GND TERMINAL	
22	XNS7FZ	NUT	
23	XTBS26+8J	SCREW	
25	XTB3+20JFZ	SCREW	
26	XTB3+8JFZ	SCREW	
27	XTWS3+10Q	SCREW	
28	RMN0170	FL HOLDER	
29	RGR0145A-A1	REAR PANEL	(E)
29	RGR0145A-B1	REAR PANEL	(EB)
31	XTW3+15T	SCREW	
32	SYE1128-2	COOLING FAN UNIT	
32-1	SHE232	COOLING FAN	
32-2	SUS271	SPRING	
32-3	SHE233-1	COOLING FAN CASE	
32-4	MDN-4RB4MRC	MOTOR	
32-5	SHE234	COOLING FAN CASE CAP	
32-6	SJT783	CONNECTOR TERMINAL	
32-7	SJS5215	SOCKET(2P)	
33	RKA0009-1	FOOT	
34	XTB3+6J	SCREW	

Ref. No.	Part No.	Part Name & Description	Remarks
		PACKING MATERIAL	
P1	RPG1263	PACKING CASE	
P2	RPN0328	PADS	
P3	XZB52X60A01Z	PROTECTION BAG(UNIT)	
P4	XZB24X34C04	PROTECTION BAG(ACCESSORIES)	
P5	RPQ0164	PAD	
		ACCESSORIES	
A1	RFKSAGX130EK	INST. MANUAL ASS' Y	(E)
A1	RQT1550-B	INSTRUCTION MANUAL	(EB)
A2	RQA0013	WARRANTY CARD	
A3	RQCB0169	SERVICENTER LIST	
A4	RJA0019-1K	AC POWER SUPPLY CORD	(E)⚠
A4	SJA193	AC POWER SUPPLY CORD	(EB)⚠
A5	RSA0007	FM INDOOR ANTENNA	
A6	SPB1163T	AM LOOP ANTENNA	
A6-1	SMA231M	AM ANTENNA HOLDER	
A6-2	XTN3+10AFZ	SCREW	
A7	RAK-SA302E	REMOTE CONTROL TRANSMITTER	
A7-1	RKK0020-K	BATTERY COVER	FOR R/C TRANSMITTER
A8	SJP9009	ATTACHMENT PLUG	(EB)⚠
A9	RQLA0134	VOLT. CAUTION LABEL	

Ref. No.	Part No.	Part Name & Description	Remarks
		INTEGRATED CIRCUIT(S)	
IC101	LM7001	IC, PLL FREQ. SYNTHESIZER	
IC201	AN7273A	IC, AM/FM IF AMP&MIXER	
IC301	SVIUPC1161C3	IC, FM MPX	
IC401	TC9163N	IC, INPUT SELECTOR	
IC402	M5218AP	IC, BUFFER AMP	
IC451	AN6558F	IC, PHONO EQ. AMP	
IC471	UPC4570C	IC, TONE CONTROL	
IC601	SVI3102D	IC, POWER AMP	⚠
IC851	BA6218	IC, MOTOR DRIVE	
IC901	MN187125STV	IC, MICRO COMPUTER	
		TRANSISTOR(S)	
Q101, 102	2SC2785FE	TRANSISTOR	
Q103, 104	UN4214TA	TRANSISTOR	
Q201, 202	2SC2787L	TRANSISTOR	
Q204-207	2SC1740SQ	TRANSISTOR	
Q208, 209	2SA933SQR	TRANSISTOR	
Q210	2SC1740SQ	TRANSISTOR	
Q251	2SA933SQR	TRANSISTOR	
Q252-254	2SC1740SQ	TRANSISTOR	
Q255, 256	2SC2785FE	TRANSISTOR	
Q301, 302	2SD1450QRSTA	TRANSISTOR	
Q303	2SA933SQR	TRANSISTOR	
Q501, 502	2SJ40CDTA	TRANSISTOR	
Q503, 504	2SC3327-A	TRANSISTOR	
Q505, 506	2SA1309A-R	TRANSISTOR	
Q511, 512	2SC3327-A	TRANSISTOR	
Q651	2SA1309A-R	TRANSISTOR	
Q652	2SB621AQSTA	TRANSISTOR	
Q653-655	2SA1309A-R	TRANSISTOR	
Q701	2SD1761DEF	TRANSISTOR	⚠
Q703	2SC2631QRSTA	TRANSISTOR	
Q704	2SC3311A-Q	TRANSISTOR	
Q705	2SC3940AQSTA	TRANSISTOR	
Q708	2SB1187DEF	TRANSISTOR	⚠
Q710	2SB1187DEF	TRANSISTOR	
Q713	2SC3311A-Q	TRANSISTOR	⚠
Q751	UN421FTA	TRANSISTOR	
Q752	2SC3940AQSTA	TRANSISTOR	
Q814, 815	UN4211	TRANSISTOR	
Q891	UN4113TA	TRANSISTOR	
Q892	UN4214TA	TRANSISTOR	
Q893	2SA933SQR	TRANSISTOR	
Q901	UN4214TA	TRANSISTOR	
Q902	2SA933SQR	TRANSISTOR	
		DIODE(S)	

Ref. No.	Part No.	Part Name & Description	Remarks
D101	MA165	DIODE	
D204	MA165	DIODE	
D206	MA165	DIODE	
D301	MA165	DIODE	
D651	MA165	DIODE	
D652	MA4068M	DIODE	
D653, 654	MA165	DIODE	
D701-704	P300DLF	DIODE	⚠
D705, 706	MA4062MTA	DIODE	
D709	MA4270	DIODE	
D711	MA4160-L	DIODE	
D751-754	1SR35200TB	DIODE	⚠
D755	MA165	DIODE	
D757	MA4068M	DIODE	
D891, 892	MA165	DIODE	
D893	LN846RPH	L. E. D.	
D901	1SS291TA	DIODE	
D902	MA165	DIODE	
D903	MA4047MTA	DIODE	
D904, 905	MA165	DIODE	
D911	MA165	DIODE	
D913, 914	MA165	DIODE	
D915	MA165	DIODE	
		VARIABLE RESISTOR(S)	
VR301	EVNDXAA00B53	V. R, MPX VCO ADJ.	
VR471, 472	EWC2XAF25C15	V. R, TONE CONTROL	
VR501	EUWMNYF20B15	V. R, VOLUME CONTROL	
VR502	EWHFDA014G15	V. R, BALANCE CONTROL	
		COMPONENT COMBINATION(S)	
Z202	SLI7Z101-T	COMPONENT COMBINATION	
Z251	RLA6Z002-T	COMPONENT COMBINATION	
Z321	SLA4Z13-Z	COMPONENT COMBINATION	
Z891	RCDHC-677	REMOTE SENSOR	
Z907	EXFP8331MW	COMPONENT COMBINATION	
Z908	EXBF9E104J	COMPONENT COMBINATION	
		COIL(S)	
L101	RLQZPR47KT-Y	COIL	
L203, 204	ELEPKR22MA	COIL	
L321, 322	RLM2B003-K	COIL	
L324	SLM1B10-1M	COIL	
L325	RLQZP1R2KT-Y	COIL	
L601, 602	SLQY07G-40	COIL	
L701	SLQZ650MH49	COIL	⚠
L851, 852	RLQZP1R0KT-Y	COIL	
L901, 902	ELEPK101KA	COIL	
L903	ELEXT101KA9	COIL	

Ref. No.	Part No.	Part Name & Description	Remarks
		TRANSFORMER(S)	
T201	RLI4B002-Z	FM OFFSET	
T202	RLI4B003-Z	FM OFFSET	
T701	RTP1N5B011-V	POWER TRANSFORMER(MAIN)	⚠
T751	RTP115E003-V	POWER TRANSFORMER(SUB)	⚠
		FILTER(S) & OSCILLATOR(S)	
CF201, 202	RLFKTF2M01LA	RED(10.700MHz)	
CF201, 202	RLFKTF2M01LB	BLUE(10.675MHz)	
CF201, 202	RLFKTF2M01LC	ORANGE(10.725MHz)	
CF901	EF0GC4194T4	OSCILLATOR(4.19MHz)	
X101	SVQ49U722-S	OSCILLATOR(7.2MHz)	
		FL DISPLAY(S)	
FL901	RSL0116-F	FL DISPLAY	⚠
		FM FRONT END PACK(S)	
TN101	SNVFE337G01	FM FRONT END PACK	
		FUSE(S)	
F1	XBA2C16TB0	FUSE(1.6A, 250V)	⚠
		SWITCH(ES)	
S601	RSP2008-J	SW, SPEAKERS	
S701	ESD26606A	SW, VOLTAGE ADJ.	⚠
S901	EVQ21405R	SW, PRESET TUNING 1	
S902	EVQ21405R	SW, PRESET TUNING 2	
S903	EVQ21405R	SW, PRESET TUNING 3	
S904	EVQ21405R	SW, PRESET TUNING 4	
S905	EVQ21405R	SW, PRESET TUNING 5	
S906	EVQ21405R	SW, PRESET TUNING 6	
S907	EVQ21405R	SW, PRESET TUNING 7	
S908	EVQ21405R	SW, PRESET TUNING 8	
S909	EVQ21405R	SW, PRESET TUNING 9	
S910	EVQ21405R	SW, PRESET TUNING 0	
S914	EVQ21405R	SW, POWER	
S916	EVQ21405R	SW, INPUT SELECT, PHONO	
S917	EVQ21405R	SW, INPUT SELECT, TUNER	
S918	EVQ21405R	SW, INPUT SELECT, TAPE/VCR2	
S922	EVQ21405R	SW, INPUT SELECT, VCR1	
S923	EVQ21405R	SW, INPUT SELECT, CD	
S925	EVQ21405R	SW, LOUDNESS	
S929	EVQ21405R	SW, TUNING(DOWN)	
S930	EVQ21405R	SW, BAND SELECT(FM)	
S931	EVQ21405R	SW, BAND SELECT(LW)	

Ref. No.	Part No.	Part Name & Description	Remarks
S932	EVQ21405R	SW, BAND SELECT(MW)	
S933	EVQ21405R	SW, FM MODE	
S934	EVQ21405R	SW, MEMORY SCAN	
S935	EVQ21405R	SW, MEMORY	
S936	EVQ21405R	SW, TUNING(UP)	
		RELAY(S)	
RL751	RSY0012-0	RELAY	⚠
		CONNECTOR(S) & SOCKET(S)	
CN201A	RJT057W007-1	CONNECTOR(7P)	
CN201B	RJU057W007	SOCKET(7P)	
CN202A	RJT057W007-1	CONNECTOR(7P)	
CN202B	RJU057W007	SOCKET(7P)	
CN501A	RJU003K010M1	SOCKET(10P)	
CN501B	RJT003K010-1	CONNECTOR(10P)	
CN601A	RJS1A1705	CONNECTOR(5P)	
CN601B	RJS1A1705	CONNECTOR(5P)	
CN651	SJT3213	CONNECTOR(2P)	
CN701	RJS1A1703	CONNECTOR(3P)	
CN702	RJS1A1705	CONNECTOR(5P)	
CN708	RJS1A1703	CONNECTOR(3P)	
CN710	RJS1A1703	CONNECTOR(3P)	
CN751	SJS305-1	SOCKET(3P)	
CN901A	RJT003K008-1	CONNECTOR(8P)	
CN901B	RJU003K008M1	SOCKET(8P)	
CN902A	RJT003K008-1	CONNECTOR(8P)	
CN902B	RJU003K008M1	SOCKET(8P)	
CN903A	RJT003K006-1	CONNECTOR(6P)	
CN903B	RJU003K006M1	SOCKET(6P)	
CN904A	RJT003K006-1	CONNECTOR(6P)	
CN904B	RJU003K006M1	SOCKET(6P)	
CN908A	SJT30548BB1	CONNECTOR(5P)	
CN908B	SJS50581BB	SOCKET(5P)	
		GND PLATE(S)	
E401	SNE1004-1	GND PLATE	
E402	SNE103-6	GND PLATE	
E403	SNE1004-1	GND PLATE	
E701, 702	EYF52BC	FUSE HOLDER	
		JACK(S)	
JK101	RJH4202	ANTENNA CONNECTION TERMINAL	
JK401	SJF3069N	PHONO, CD TERMINAL	
JK402	SJF3069N	VCR1 TERMINAL	
JK403	SJF3069N	TAPE/VCR2 TERMINAL	
JK409	RJJ33TR01	REMOTE CONTROL OUT TERMINAL	
JK601	RJR0054	SPEAKER CONNECTTER, A	

Ref. No.	Part No.	Part Name & Description	Remarks
JK602	RJR0054	SPEAKER CONNECTTER, B	
JK791	SJS9236	AC INLET	⚠
HP601	RJJ63TS01	HEADPHONES JACK	
		FLAT CABLE(S)	
W601	RWJ1810340KQ	FLAT CABLE(10P)	
W701	RWJ1805260KK	FLAT CABLE(5P)	
W702	RWJ1805220KQ	FLAT CABLE(5P)	
W901	RWJ1803080KK	FLAT CABLE(3P)	
W902	RWJ1808080KC	FLAT CABLE(8P)	

■ RESISTORS & CAPACITORS

Notes : * Capacity values are in microfarads (uF) unless specified otherwise, P=Pico-farads(pF) F=Farads(F)
*** Resistance values are in ohms, unless specified otherwise, 1K=1,000(OHM) , 1M=1,000k(OHM)**

Ref. No.	Part No.	Values & Remarks
		RESISTORS
R101	ERDS2TJ103	1/4W 10K
R102	ERDS2TJ103	1/4W 10K
R104	ERDS2TJ102	1/4W 1K
R105	ERDS2TJ561	1/4W 560
R106	ERDS2TJ562	1/4W 5.6K
R107	ERDS2TJ103	1/4W 10K
R108	ERDS2TJ151	1/4W 150
R109-111	ERDS2TJ104	1/4W 100K
R201	ERDS2TJ822	1/4W 8.2K
R202	ERDS2TJ474	1/4W 470K
R203	ERDS2TJ331	1/4W 330
R204	ERDS2TJ824	1/4W 820K
R205	ERDS2TJ391	1/4W 390
R206	ERDS2TJ561	1/4W 560
R207	ERDS2TJ822	1/4W 8.2K
R208	ERDS2TJ102	1/4W 1K
R209	ERDS2TJ471	1/4W 470
R210	ERDS2TJ332	1/4W 3.3K
R211	ERDS2TJ222	1/4W 2.2K
R212	ERDS2TJ153	1/4W 15K
R213	ERDS2TJ104	1/4W 100K
R214	ERDS2TJ824	1/4W 820K
R215	ERDS2TJ153	1/4W 15K
R216	ERDS2TJ563	1/4W 56K
R217	ERDS2TJ223	1/4W 22K

Ref. No.	Part No.	Values & Remarks
R218	ERDS2TJ563	1/4W 56K
R219	ERDS2TJ223	1/4W 22K
R220	ERDS2TJ103	1/4W 10K
R221	ERDS2TJ104	1/4W 100K
R222	ERDS2TJ473	1/4W 47K
R223	ERDS2TJ154	1/4W 150K
R224	ERDS2TJ223	1/4W 22K
R226	ERDS2TJ103	1/4W 10K
R228	ERDS2TJ123	1/4W 12K
R230	ERDS2TJ104	1/4W 100K
R231	ERDS2TJ102	1/4W 1K
R232	ERDS2TJ122	1/4W 1.2K
R233	ERDS2TJ684	1/4W 680K
R234	ERDS2TJ103	1/4W 10K
R235	ERDS2TJ471	1/4W 470
R236	ERDS2TJ183T	1/4W 18K
R238	ERDS2TJ271	1/4W 270
R240	ERDS2TJ152	1/4W 1.5K
R247	ERDS2TJ103	1/4W 10K
R251	ERDS2TJ103	1/4W 10K
R252	ERDS2TJ822	1/4W 8.2K
R253	ERDS2TJ182	1/4W 1.8K
R254	ERDS2TJ223	1/4W 22K
R256	ERDS2TJ102	1/4W 1K
R258	ERDS2TJ122	1/4W 1.2K
R259	ERDS2TJ223	1/4W 22K
R261	ERDS2TJ102	1/4W 1K
R262	ERDS2TJ332	1/4W 3.3K

Ref. No.	Part No.	Values & Remarks
R263	ERDS2TJ153	1/4W 15K
R264	ERDS2TJ102	1/4W 1K
R301	ERDS2TJ393	1/4W 39K
R302	ERDS2TJ151	1/4W 150
R303, 304	ERDS2TJ223	1/4W 22K
R305, 306	ERDS2TJ272T	1/4W 2.7K
R307, 308	ERDS2TJ562	1/4W 5.6K
R309	ERDS2TJ124T	1/4W 120K
R311	ERDS2TJ102	1/4W 1K
R312	ERDS2TJ153	1/4W 15K
R313, 314	ERDS2TJ473	1/4W 47K
R315	ERDS2TJ103	1/4W 10K
R316	ERDS2TJ222	1/4W 2.2K
R317	ERDS2TJ473	1/4W 47K
R321, 322	ERDS2TJ153	1/4W 15K
R325, 326	ERDS2TJ102	1/4W 1K
R401, 402	ERDS2TJ332	1/4W 3.3K
R403, 404	ERDS2TJ822	1/4W 8.2K
R405, 406	ERDS2TJ102	1/4W 1K
R411-414	ERDS2TJ222	1/4W 2.2K
R415-418	ERDS2TJ102	1/4W 1K
R421, 422	ERDS2TJ222	1/4W 2.2K
R429-431	ERDS2TJ103	1/4W 10K
R451, 452	ERDS2TJ391	1/4W 390
R453, 454	ERDS2TJ224T	1/4W 220K
R455, 456	ERDS2TJ563	1/4W 56K
R457, 458	ERDS2TJ271	1/4W 270
R459, 460	ERDS2TJ680T	1/4W 68

Ref. No.	Part No.	Values & Remarks
R461, 462	ERDS2TJ184T	1/4W 180K
R463, 464	ERDS2TJ123	1/4W 12K
R465, 466	ERDS2TJ563	1/4W 56K
R467, 468	ERDS2TJ102	1/4W 1K
R471, 472	ERDS2TJ104	1/4W 100K
R473, 474	ERDS2TJ474	1/4W 470K
R475, 476	ERDS2TJ182	1/4W 1.8K
R477, 478	ERDS2TJ392T	1/4W 3.9K
R479, 480	ERDS2TJ223	1/4W 22K
R481, 482	ERDS2TJ332	1/4W 3.3K
R485, 486	ERDS2TJ223	1/4W 22K
R487, 488	ERDS2TJ122	1/4W 1.2K
R489, 490	ERDS2TJ821	1/4W 820
R501, 502	ERDS2TJ104	1/4W 100K
R503, 504	ERDS2TJ102	1/4W 1K
R505-508	ERDS2TJ104	1/4W 100K
R509, 510	ERDS2TJ103	1/4W 10K
R513	ERDS2TJ153	1/4W 15K
R514	ERDS2TJ394	1/4W 390K
R521, 522	ERDS2TJ104	1/4W 100K
R523, 524	ERDS2TJ222	1/4W 2.2K
R525, 526	ERDS2TJ221	1/4W 220
R527-530	ERDS2TJ102	1/4W 1K
R531	ERDS2TJ394	1/4W 390K
R532	ERDS2TJ103	1/4W 10K
R533	ERDS2TJ104	1/4W 100K
R534	ERDS2TJ103	1/4W 10K
R535	ERDS2TJ104	1/4W 100K
R601, 602	ERDS2TJ102	1/4W 1K
R603, 604	ERDS2TJ563	1/4W 56K
R605, 606	ERDS2TJ332	1/4W 3.3K
R607, 608	ERDS2TJ563	1/4W 56K
R609, 610	ERDS2TJ470	1/4W 47
R611, 612	ERDS1FVJ100T	1/2W 10 ⚠
R614	ERD25FJ470	1/4W 47 ⚠
R619, 620	ERG2SJ331P	2W 330
R623	ERDS2TJ684	1/4W 680K ⚠
R627	ERDS2TJ154	1/4W 150K ⚠
R628	ERDS2TJ684	1/4W 680K
R651-654	ERDS2TJ223	1/4W 22K
R655	ERDS2TJ682T	1/4W 6.8K
R656	ERDS2TJ103	1/4W 10K
R657	ERDS2TJ220T	1/4W 22
R658	ERDS2TJ223	1/4W 22K
R659	ERDS2TJ222	1/4W 2.2K
R660	ERDS2TJ103	1/4W 10K
R661, 662	ERDS2TJ333	1/4W 33K
R663	ERDS2TJ153	1/4W 15K
R664, 665	ERDS2TJ103	1/4W 10K
R666	ERDS2TJ104	1/4W 100K
R670	ERDS1FVJ390T	1/2W 39 ⚠
R671, 672	ERDS2TJ471	1/4W 470

Ref. No.	Part No.	Values & Remarks
R673	ERDS2TJ332	1/4W 3.3K
R689, 690	ERDS2TJ221	1/4W 220
R701	ERDS1FVJ332T	1/2W 3.3K ⚠
R702	ERDS2TJ122	1/4W 1.2K
R703	ERDS2TJ272T	1/4W 2.7K
R704	ERDS2TJ222	1/4W 2.2K
R705	ERDS2TJ272T	1/4W 2.7K ⚠
R706	ERDS2TJ102	1/4W 1K ⚠
R708, 709	ERDS1FVJ180T	1/2W 18 ⚠
R710	ERDS2TJ272T	1/4W 2.7K
R711	ERDS1FJ270	1/2W 27 ⚠
R715	ERDS2TJ103	1/4W 10K ⚠
R716	ERDS2TJ222	1/4W 2.2K
R717	ERD25FVJ150T	1/4W 15 ⚠
R718, 719	ERDS2TJ1R5T	1/4W 1.5 ⚠
R755	ERDS2TJ102	1/4W 1K
R771	ERDS1FVJ2R2T	1/2W 2.2 ⚠
R773	ERDS1FVJ6R8T	1/2W 6.8 ⚠
R777	ERDS1FVJ4R7T	1/2W 27 ⚠
R780	ERDS1FVJ4R7T	1/2W 4.7 ⚠
R839, 840	ERDS2TJ153	1/4W 15K
R851	ERDS1FVJ2R2T	1/2W 2.2 ⚠
R891, 892	ERDS2TJ102	1/4W 1K
R893	ERDS2TJ472	1/4W 4.7K
R901	ERDS2TJ102	1/4W 1K
R902	ERDS2TJ681	1/4W 680
R903, 904	ERDS2TJ103	1/4W 10K
R905, 906	ERDS2TJ102	1/4W 1K
R907, 908	ERDS2TJ182	1/4W 1.8K
R909, 910	ERDS2TJ222	1/4W 2.2K
R911, 912	ERDS2TJ392T	1/4W 3.9K
R913, 914	ERDS2TJ562	1/4W 5.6K
R915, 916	ERDS2TJ123	1/4W 12K
R917, 918	ERDS2TJ273	1/4W 27K
R919	ERDS2TJ224T	1/4W 220K
R920	ERDS2TJ222	1/4W 2.2K
R921	ERDS2TJ103	1/4W 10K
R922, 923	ERDS2TJ472	1/4W 4.7K
R924-926	ERDS2TJ104	1/4W 100K
R927	ERDS2TJ181T	1/4W 180
R930, 931	ERD25FJ101	1/4W 100 ⚠
R937	ERDS2TJ103	1/4W 10K
R938	ERDS2TJ104	1/4W 100K
R941	ERDS2TJ103	1/4W 10K
R943, 944	ERDS2TJ104	1/4W 100K
R945-947	ERDS2TJ331	1/4W 330
		CAPACITORS
C101, 102	ECBT1H150JC5	50V 15P
C103	ECBT1H102KB5	50V 1000P
C105	ECEA0JU221	6.3V 220U

Ref. No.	Part No.	Values & Remarks
C106	ECKR1H103ZF5	50V 0.01U
C107	ECKT1H223ZF	50V 0.022U
C108	ECEA1EKA4R7B	25V 4.7U
C109	ECEA1CU330	16V 33U
C110, 111	ECBT1H102KB5	50V 1000P
C201, 202	ECKR1H103ZF5	50V 0.01U
C204	ECBT1H470J5	50V 47P
C205	ECKT1H223ZF	50V 0.022U
C206	ECBT1H150JC5	50V 15P
C207	ECBT1C103MS5	16V 0.01U
C208	ECEA0JU101B	6.3V 100U
C209	ECEA1HKA100B	50V 10U
C210-212	ECKT1H223ZF	50V 0.022U
C213	ECBT1H101KB5	50V 100P
C214	ECEA1CKA100B	16V 10U
C215	ECKR1H103ZF5	50V 0.01U
C216	ECEA1CKA100B	16V 10U
C217	ECEA1HKA010B	50V 1U
C220	ECEA1CKA100B	16V 10U
C221	ECFR1E183KR	25V 0.018U
C222	ECQB1H473KF3	50V 0.047U
C225	ECBT1H180JC5	50V 18P
C226	ECKR1H103ZF5	50V 0.01U
C227	ECEA1CKA100B	16V 10U
C228	ECBT1H8R2KC5	50V 8.2P
C229	ECBT1H102KB5	50V 1000P
C230	ECBT1H471KB5	50V 470P
C251	ECKT1H223ZF	50V 0.022U
C252	ECEA1HKA010B	50V 1U
C253	ECKT1H223ZF	50V 0.022U
C301	ECA1CM101B	16V 100U
C302	ECEA1HKAR47B	50V 0.47U
C303	ECEA1HKA010B	50V 1U
C304-306	ECEA1HKA3R3B	50V 3.3U
C307, 308	ECFR1E392KR	25V 3900P
C309	ECKT1H223ZF	50V 0.022U
C310	ECFR1E473KR	25V 0.047U
C311	ECQP1471JZ	50V 470P
C312	ECEA1EKA4R7B	25V 4.7U
C313, 314	ECBT1H102KB5	50V 1000P
C321	ECEA1CKA100B	16V 10U
C323, 324	ECFR1E332KR	25V 3300P
C325	ECBT1H330J5	50V 33P
C326	ECKR1H103ZF5	50V 0.01U
C401, 402	ECBT1E103ZF	25V 0.01U
C404	ECEA1HKA010B	50V 1U
C405, 406	ECBT1H101KB5	50V 100P
C407	ECEA0JU101B	6.3V 100U
C409, 410	ECBT1E103ZF	25V 0.01U
C421, 422	ECEA1CKA220B	16V 22U
C451, 452	ECEA1EKA4R7B	25V 4.7U
C453, 454	ECBT1H101KB5	50V 100P

Ref. No.	Part No.	Values & Remarks
C455, 456	ECBT1H102KB5	50V 1000P
C457, 458	ECFR1E223KR	25V 0.022U
C459, 460	ECFR1E682KR	25V 6800P
C461, 462	ECEA1EKA4R7B	25V 4.7U
C463, 464	ECEA1AKA330B	10V 33U
C471, 472	ECBT1H150JC5	50V 15P
C473, 474	ECBT1H101KB5	50V 100P
C475, 476	ECBT1H221KB5	50V 220P
C477, 478	ECEA1CKA100B	16V 10U
C479, 480	ECFR1E123KR	25V 0.012U
C481, 482	ECFR1E683KR	25V 0.068U
C483, 484	ECFR1E562KR	25V 5600P
C485, 486	ECFR1E273KR	25V 0.027U
C487, 488	ECBT1E103ZF	25V 0.01U
C489-492	ECEA1CKA100B	16V 10U
C501, 502	ECEA1EKA4R7B	25V 4.7U
C503, 504	ECBT1H101KB5	50V 100P
C505, 506	ECEA1EKA4R7B	25V 4.7U
C507, 508	ECBT1E103ZF	25V 0.01U
C509, 510	ECFR1E333KR	25V 0.033U
C519, 520	ECEA1EKA4R7B	25V 4.7U
C521-523	ECBT1E103ZF	25V 0.01U
C601, 602	ECEA1EKA4R7B	25V 4.7U
C603, 604	ECBT1H271KB5	50V 270P
C605, 606	ECEA1CKA220B	16V 22U

Ref. No.	Part No.	Values & Remarks
C607, 608	ECCD1H150KC	50V 15P
C609, 610	ECBT1H821KB5	50V 820P
C611, 612	ECFR1E223KR	25V 0.022U
C614	ECEA1HU330	50V 33U
C615	ECEA2AU100	100V 10U
C651	ECEA1HKA2R2B	50V 2.2U
C652	ECEA1CKA100B	16V 10U
C653	ECEA0JU221	6.3V 220U
C654	ECKT1H223ZF	50V 0.022U
C671, 672	ECBT1H180JC5	50V 18P
C673, 674	ECBT1H221KB5	50V 220P
C675, 676	ECBT1H101KB5	50V 100P
C677, 678	ECBT1H331KB5	50V 330P
C679, 680	ECBT1H101KB5	50V 100P
C687, 688	ECKR1H103ZF5	50V 0.01U
C689, 690	ECKT1H101KB	50V 100P
C691, 692	ECKR1H103ZF5	50V 0.01U
C693-696	ECBT1H331KB5	50V 330P
C697, 698	ECBT1H101KB5	50V 100P
C701, 702	ECES1HV822UM	50V 8200P ⚠
C703	ECKR1H103ZF5	50V 0.01U
C704	ECA1VM101B	35V 100U
C705	ECA1CM101B	16V 100U
C706	ECKR1H103ZF5	50V 0.01U
C709	ECKR1H103ZF5	50V 0.01U ⚠

Ref. No.	Part No.	Values & Remarks
C710	ECKR1H103ZF5	50V 0.01U
C711	ECA1CM101B	16V 100U
C712	ECEA1VU470	35V 47U
C713	ECEA1AU101	10V 100U
C751	ECA1EM102E	25V 1000U
C752	ECEA1CU470	16V 47U
C753	ECBT1E103ZF	25V 0.01U
C754	ECKR1H103ZF5	50V 0.01U ⚠
C755	ECBT1E103ZF	25V 0.01U
C771	ECQE2104KF3	250V 0.1U ⚠
C791	ECKWNS103ZVS	500V 0.01U ⚠
C851, 852	ECEA0JU101B	6.3V 100U
C853, 854	ECFR1E104KR	25V 0.1U
C891	ECFR1E392KR	25V 3900P
C901	ECEA0JU102	6.3V 1000U
C902	ECBT1E103ZF	25V 0.01U
C904, 905	ECEA0JU102	6.3V 1000U
C906	ECBT1E103ZF	25V 0.01U
C911, 912	ECEA2AU100	100V 10U ⚠
C913	ECEA1HKA100B	50V 10U ⚠
C914	ECEA1HKA100B	50V 10U
C916	ECEA1HKA010B	50V 1U

■ PACKAGING

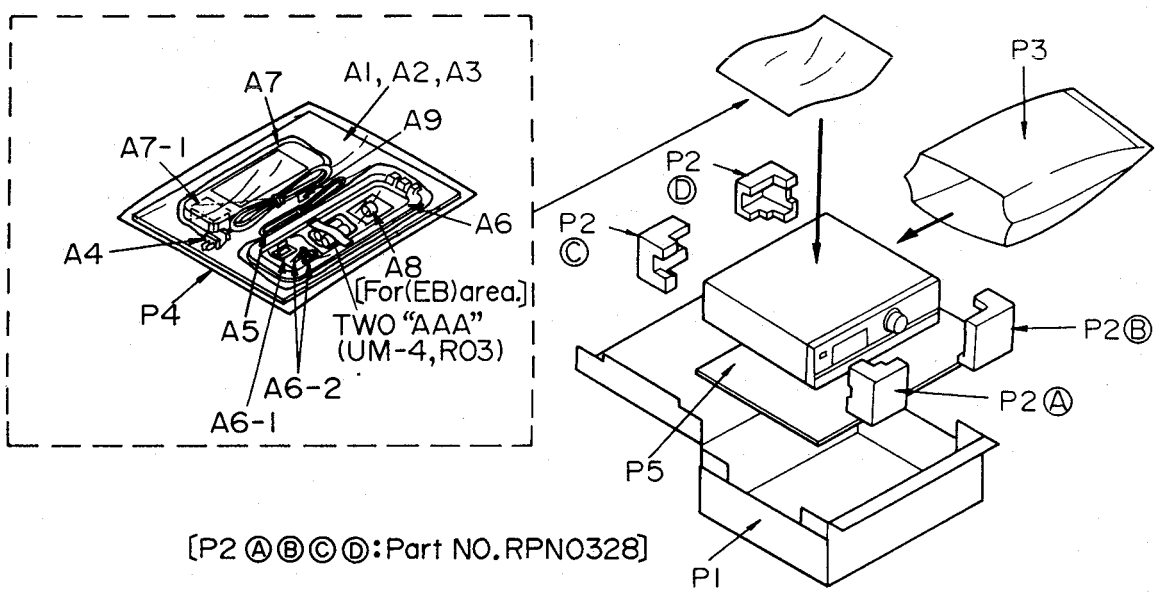

Printed in Japan
H920612000 NH/YU/TN

ORDER NO. AD9206199A2

Service Manual

Simplified

AV Control Stereo Receiver

Receiver

SA-GX130

Colour

(K) ... Black Type

Area

Suffix for Model No.	Area	Colour
(EG)	Germany and Italy.	(K)

- Please file and use this manual together with the service manual for Model No. SA-GX130 Order No. AD9206155C2.

Notes:
- This simplified service manual is provided to indicate the main differences between the original model No. SA-GX130 (E) and the subsequent model No. SA-GX130 (EG).
- Refer to the schematic diagram, printed circuit boards for tuner P.C.B./FL drive P.C.B./operation P.C.B./power supply P.C.B./speaker switch/headphones jack P.C.B. and wiring connection diagram of this service manual.

Technics

CHANGES

■ CHANGE IN REPLACEMENT PARTS LIST (on pages 35～40.)

Notes: • Mentioned in this parts list is only those different from Model No. SA-GX130 (E).
All other parts are the same as for SA-GX130 (E).
• Important safety notice:
Components identified by ⚠ mark have special characteristics important for safety. Furthemore, special parts which have purposes of fire-retardant (resistors), high-quality sound (cpapacitors), low-noise (resistors), etc. are used. When replacing any of components, be sure to use only manufacturer's specified parts shown in the parts list.

Ref. No.	Change of Part No. SA-GX130 (E)	➡ SA-GX130 (EG)	Part Name & Description	Remarks
TRANSISTOR(S)				
Q251	2SA933SQR	——	TRANSISTOR	Deletion
Q252～254	2SC1740SQ	——	TRANSISTOR	Deletion
Q255, 256	2SC2785FE	——	TRANSISTOR	Deletion
DIODE(S)				
D915	MA165	——	DIODE	Deletion
COMPONENT COMBINATION(S)				
Z201	——	**RLA2Z001-T**	COMPONENT COMBINATION	Addition
Z251	RLA6Z002-T	——	COMPONENT COMBINATION	Deletion
COIL(S)				
L203, 204	ELEPKR22MA	**ELEPK1R0MA**	COIL	
SWITCH(ES)				
S701	ESD26606A	——	SW, VOLTAGE ADJ.	⚠ Deletion
S932	EVQ21405R	——	SW, BAND SELECT (MW)	Deletion
RESISTORS				
R102	ERDS2TJ103	——	C. RESISTOR, 1/4W, 10kΩ	Deletion
R229	——	**ERDS2TJ102**	C. RESISTOR, 1/4W, 1kΩ	Addition
R231	ERDS2TJ102	**ERDS2TJ471**	C. RESISTOR, 1/4W, 470Ω	
R251	ERDS2TJ103	——	C. RESISTOR, 1/4W, 10kΩ	Deletion
R252	ERDS2TJ822	——	C. RESISTOR, 1/4W, 8.2kΩ	Deletion
R253	ERDS2TJ182	——	C. RESISTOR, 1/4W, 1.8kΩ	Deletion
R254	ERDS2TJ223	——	C. RESISTOR, 1/4W, 22kΩ	Deletion
R256	ERDS2TJ102	——	C. RESISTOR, 1/4W, 1kΩ	Deletion
R258	ERDS2TJ122	——	C. RESISTOR, 1/4W, 1.2kΩ	Deletion
R259	ERDS2TJ223	——	C. RESISTOR, 1/4W, 22kΩ	Deletion
R261	ERDS2TJ102	——	C. RESISTOR, 1/4W, 1kΩ	Deletion
R262	ERDS2TJ332	——	C. RESISTOR, 1/4W, 3.3kΩ	Deletion
R263	ERDS2TJ153	——	C. RESISTOR, 1/4W, 15kΩ	Deletion
R264	ERDS2TJ102	——	C. RESISTOR, 1/4W, 1kΩ	Deletion
R301	ERDS2TJ393	**ERDS2TJ333**	C. RESISTOR, 1/4W, 33kΩ	
R309	ERDS2TJ124T	**ERDS2TJ154**	C. RESISTOR, 1/4W, 150kΩ	
CAPACITORS				
C228	ECBT1H8R2KC5	**ECBT1H100JC5**	C. CAPACITOR, 50V, 10pF	
C251	ECKT1H223ZF	——	C. CAPACITOR, 50V, 0.022μF	Deletion
C252	ECEA1HKA010B	——	E. CAPACITOR, 50V, 1μF	Deletion
C253	ECKT1H223ZF	——	C. CAPATITOR 50V, 0.022μF	Deletion
C693, 694	ECBT1H331KB5	**ECKR1H331KB5**	C. CAPACITOR, 50V, 330pF	
CABINET AND CHASSIS				
9	RFKGAGX130EK	**RFKGAGX130EG**	FRONT PANEL ASS'Y	
13	RGU0345E-K1	**RGU0345F-K1**	BUTTON, INPUT SELECTOR	
29	RGR0145A-A1	**RGR0145B-A**	REAR PANEL	
PACKING MATERIAL				
P1	RPG1263	**RPG1310**	PACKING CASE	
ACCESSORIES				
A1	RFKSAGX130EK	**RQT1549-D**	INSTRUCTION MANUAL	
A9	RQLA0134	——	VOLT. CAUTION LABEL	Deletion

■ CABINET PARTS LOCATION (on page 33.)

SA-GX130 (E)

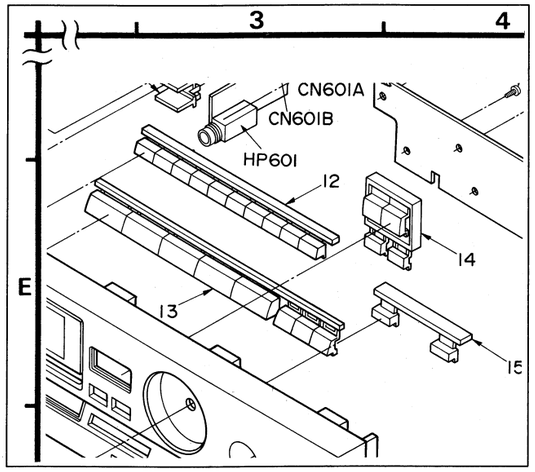

SA-GX130 (EG)

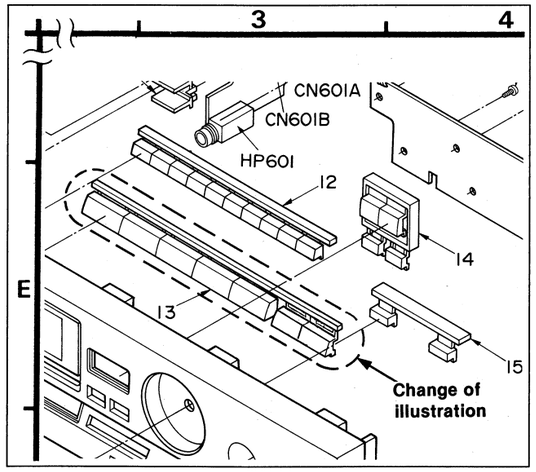

■ PACKAGING (on page 40.)

SA-GX130 (E)

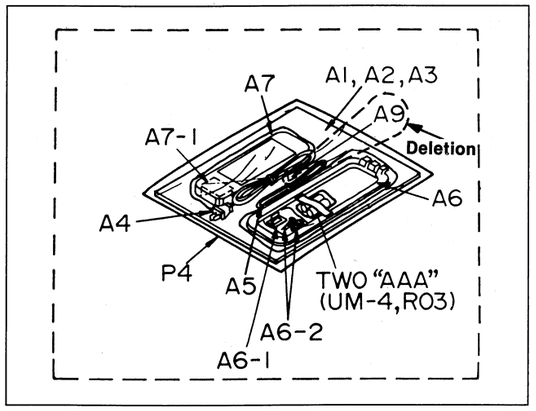

SA-GX130 (EG)

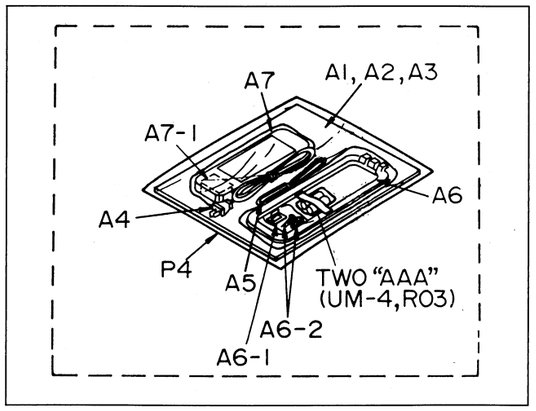

■ BLOCK DIAGRAM (on page 16.)

SA-GX130 (E)

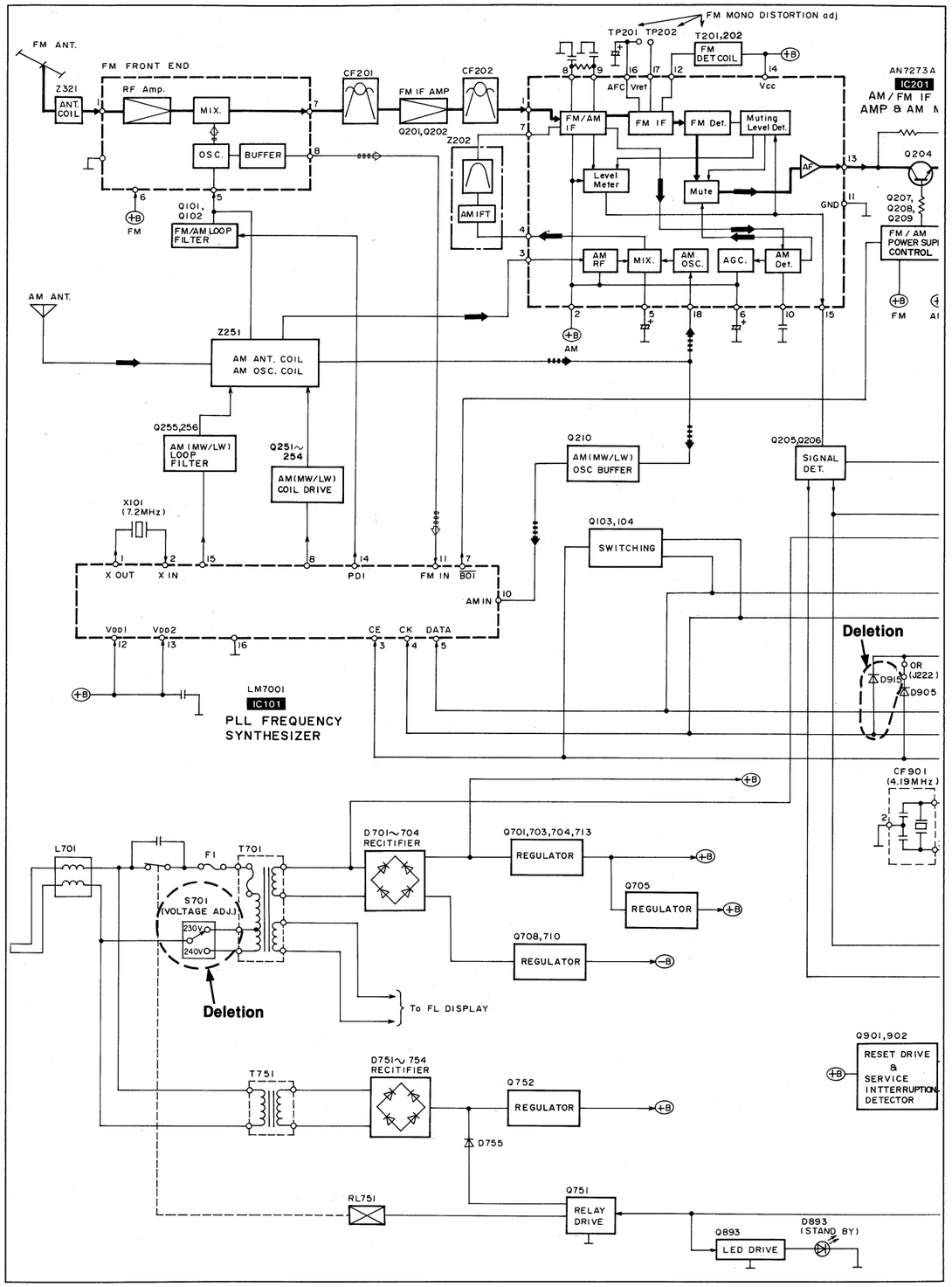

■ BLOCK DIAGRAM (on page 16.)

EG)

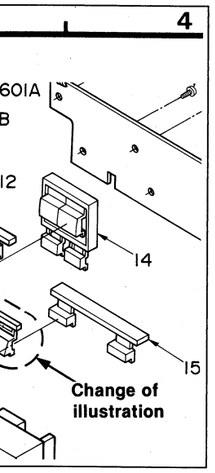

G)

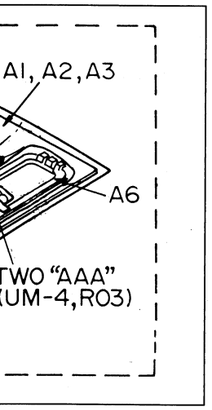

SA-GX130 (E)

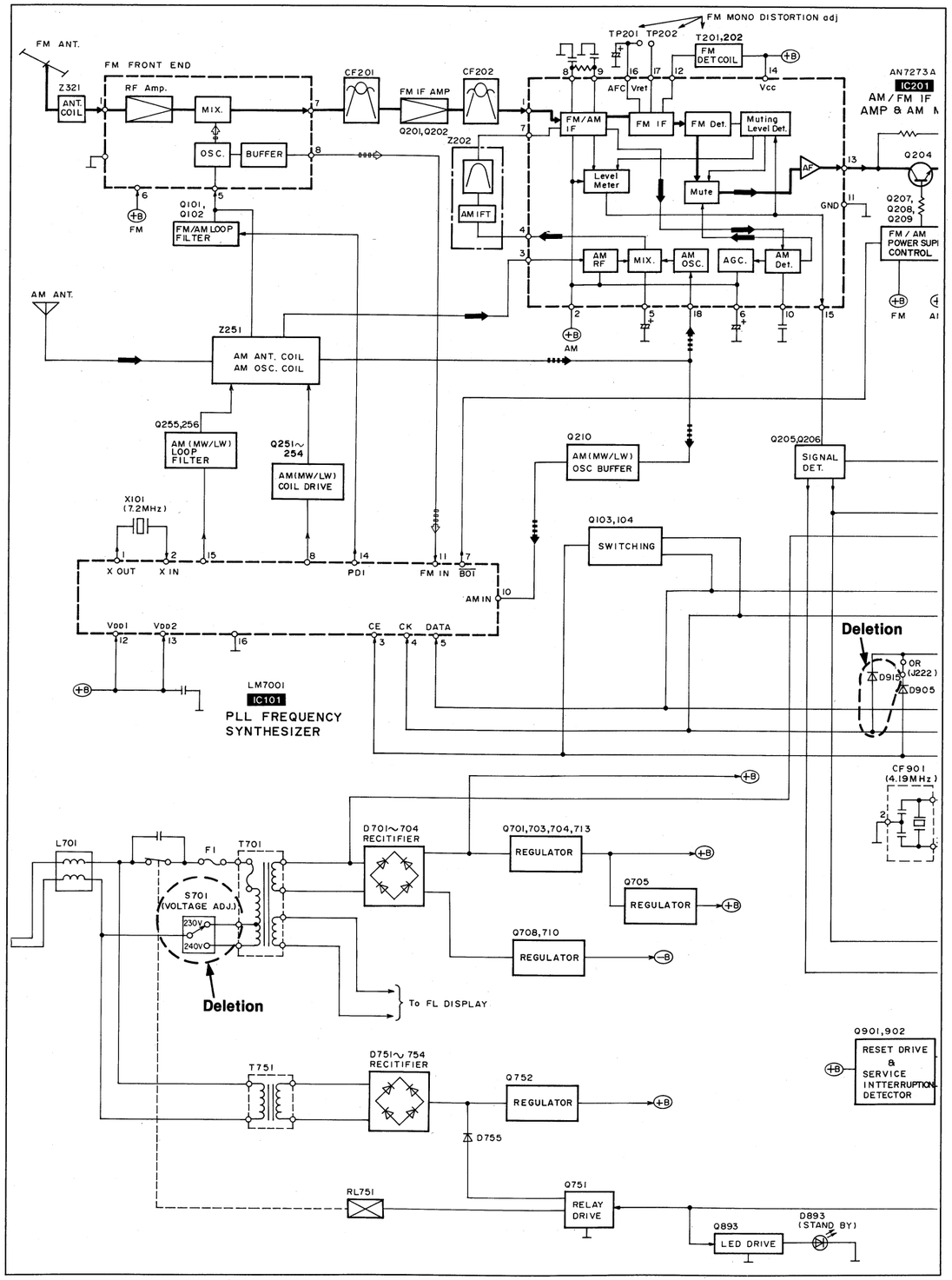

SA-GX130 (EG)

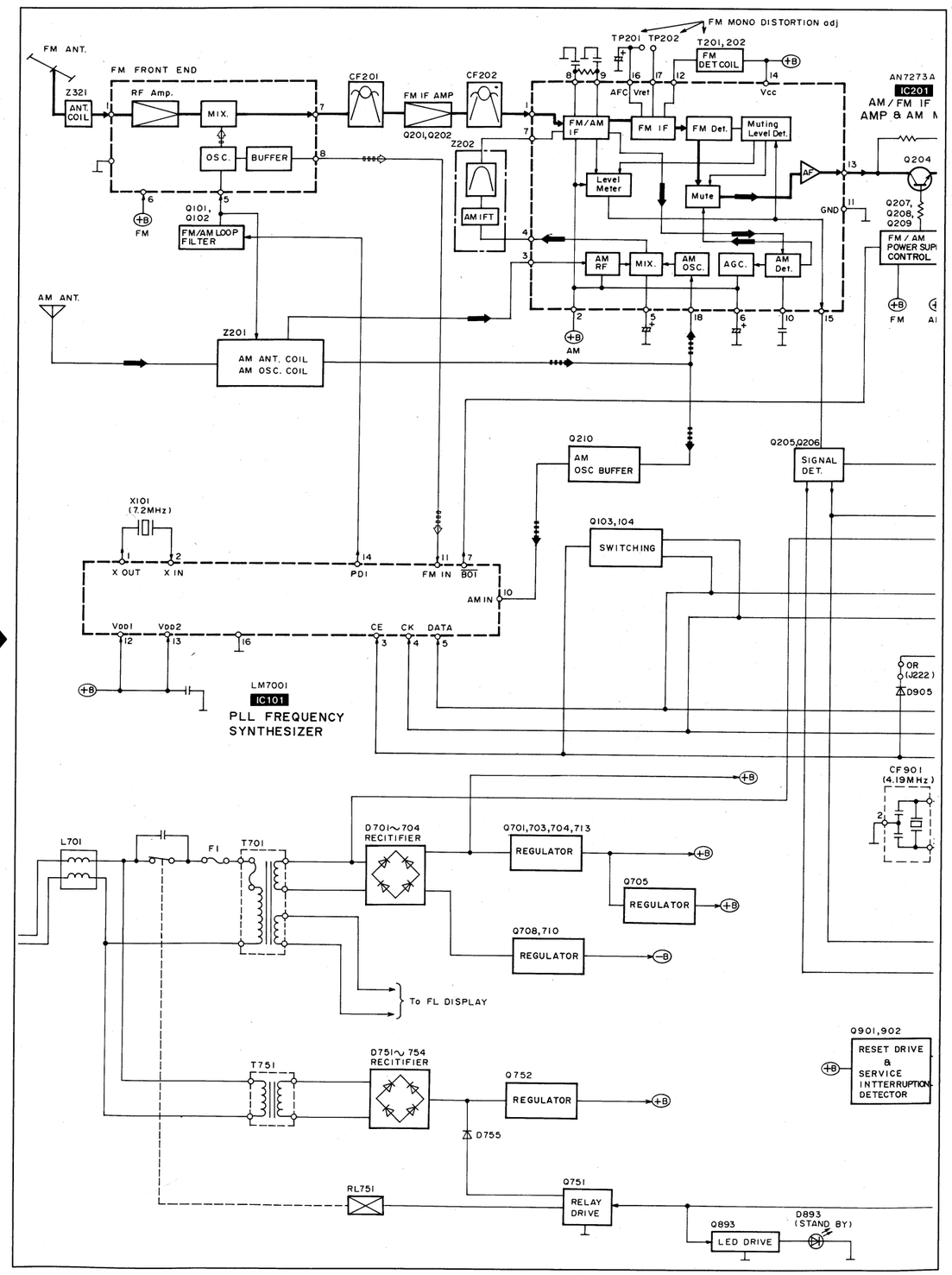

SCHEMATIC DIAGRAM

Note 1:

- S601 : Speaker selectors (SPEAKERS) switches. [S601-1: A, S601-2: B]
- S901~910 : Preset-tuning (1-0) (30 CHANNEL RANDOM PRESET TUNING) switches. [S901: 1, S902: 2, S903: 3, S904: 4, S905: 5, S906: 6, S907: 7, S908: 8, S909: 9, S910: 0]
- S914 : Power (POWER) switch.
- S916, 917, 922, 923 : Input selector switches. [S916: PHONO, S917: TUNER, S922: VCR 1, S923: CD]
- S918 : Tape monitor (TAPE MONITOR/VCR 2) switch.
- S925 : Loudness (LOUDNESS) switch.
- S929, 936 : Tuning (TUNING) switches. [S929: DOWN, S936: UP]
- S930, 931 : Band selector switches. [S930: FM, S931: AM]
- S933 : FM mode selector (FM MODE) switch.
- S934 : Memory scan (MEMORY SCAN) switch.
- S935 : Memory (MEMORY) switch.

- Signal line
  - : FM OSC signal
  - : FM signal
  - : AM OSC signal
  - : AM signal
  - : Phono signal
  - : AF signal (Lch)
  - : Positive voltage lines
  - : Negative voltage lines
- Important safety notice:
  Components identified by ⚠ mark have special characteristics important for safety. When replacing any of these components, use only manufacturer's specified parts. Indicated voltage values are standard values for the unit measured by the DC electronic circuit tester (high-impedance) with the chassis taken as standard. Therefore, there may exist some errors in the voltage values, depending on internal impedance of the DC circuit tester.
- All voltage values shown in circuitry are DC voltage in FM signal (Stereo signal) reception mode.

∗Figures in ( ) Stand for DC-voltage in AM signal reception mode.

- The supply part number is described alone in the replacement parts list.

Ref. No.	Production Part No.	Supply Part No.
IC301	AN7470	SVIUPC1161C3

∗**Caution!**

IC and LSI are sensitive to static electricity. Secondary trouble can be prevented by taking care during repair.

∗Cover the parts boxes made of plastics with alminum foil.

∗Ground the soldering iron.

∗Put a conductive mat on the work table.

∗Do not touch the legs of IC or LSI with the fingers directly.

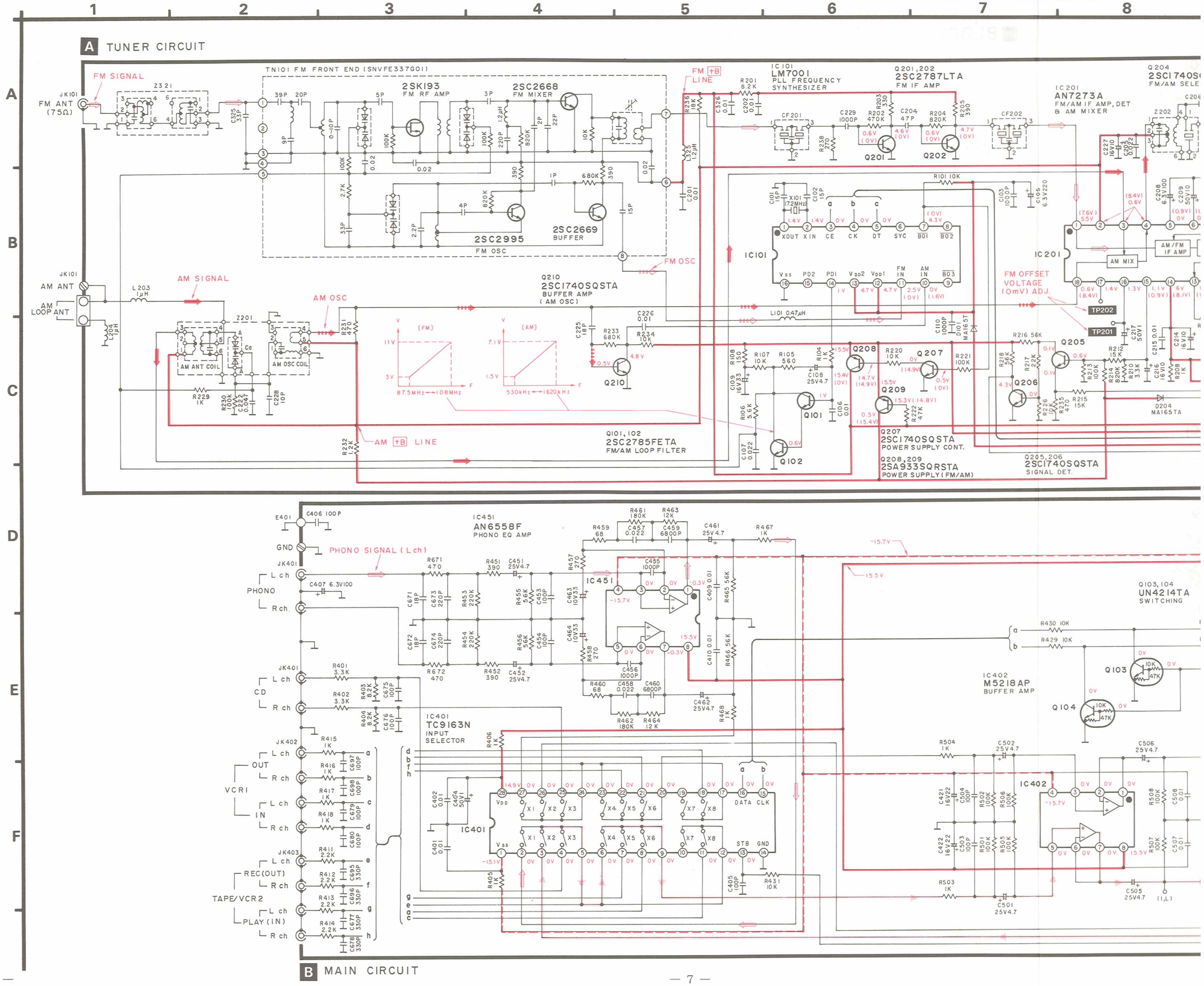

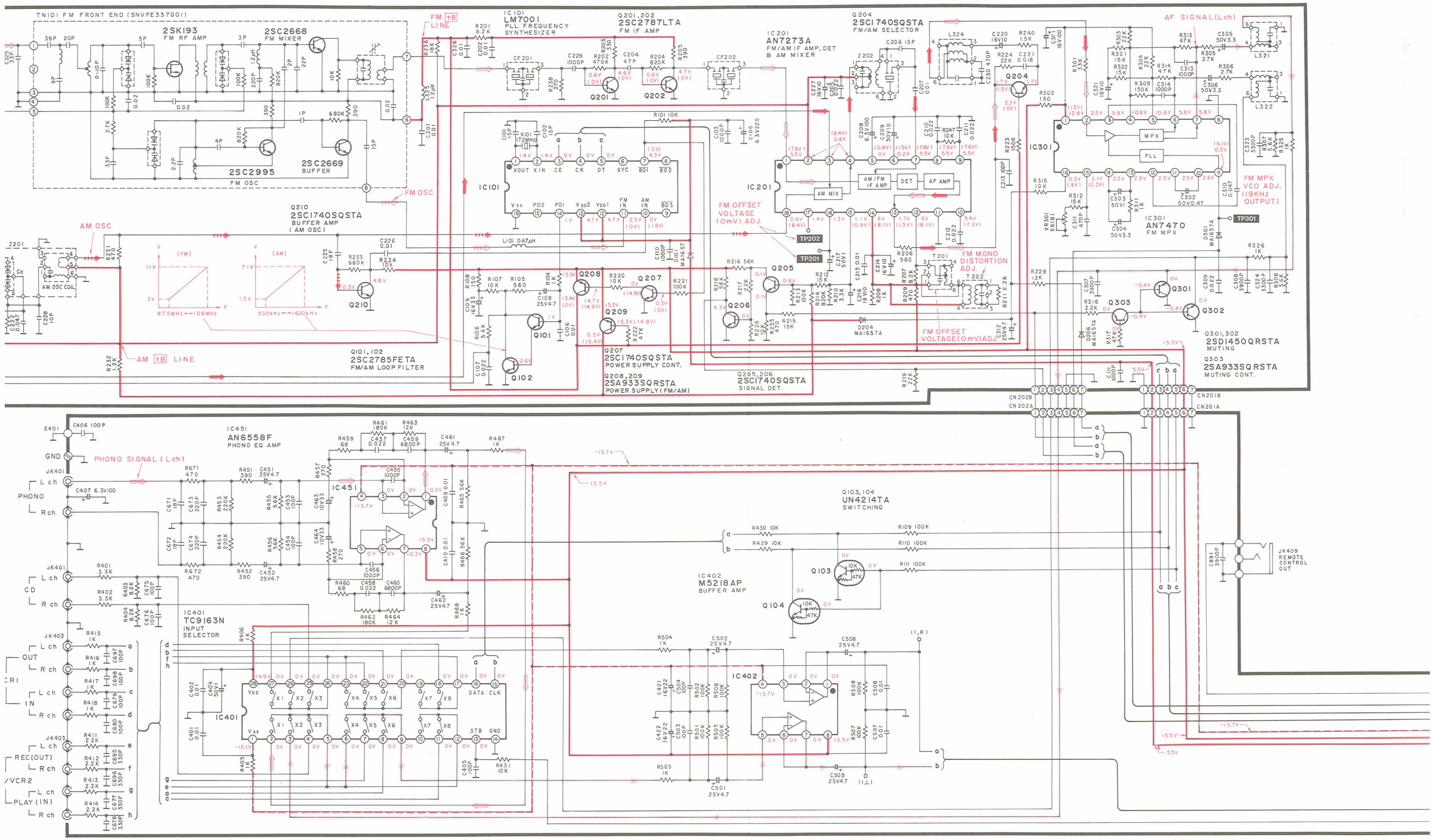

B MAIN CIRCUIT

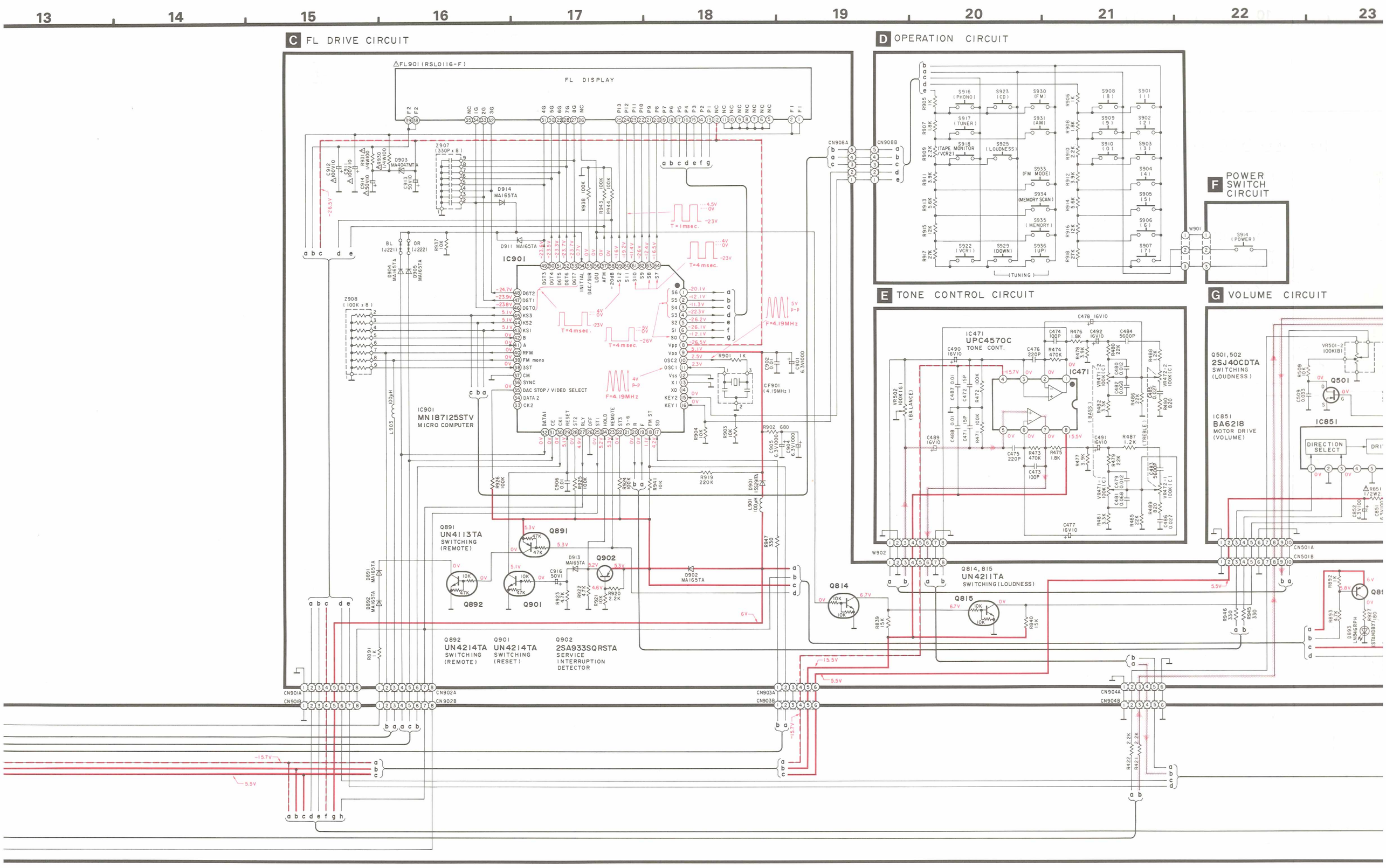
13
14
15
16
17
18
19
20
21
22
23
C FL DRIVE CIRCUIT
D OPERATION CIRCUIT
F POWER SWITCH CIRCUIT
E TONE CONTROL CIRCUIT
G VOLUME CIRCUIT
FL DISPLAY
IC901
MN187125STV
MICRO COMPUTER
IC471
UPC4570C
TONE CONT.
Q501, 502
2SJ40CDTA
SWITCHING
(LOUDNESS)
IC851
BA6218
MOTOR DRIVE
(VOLUME)
Q891
UN4113TA
SWITCHING
(REMOTE)
Q892
UN4214TA
SWITCHING
(REMOTE)
Q901
UN4214TA
SWITCHING
(RESET)
Q902
2SA933SQRSTA
SERVICE
INTERRUPTION
DETECTOR
Q814, 815
UN4211TA
SWITCHING (LOUDNESS)

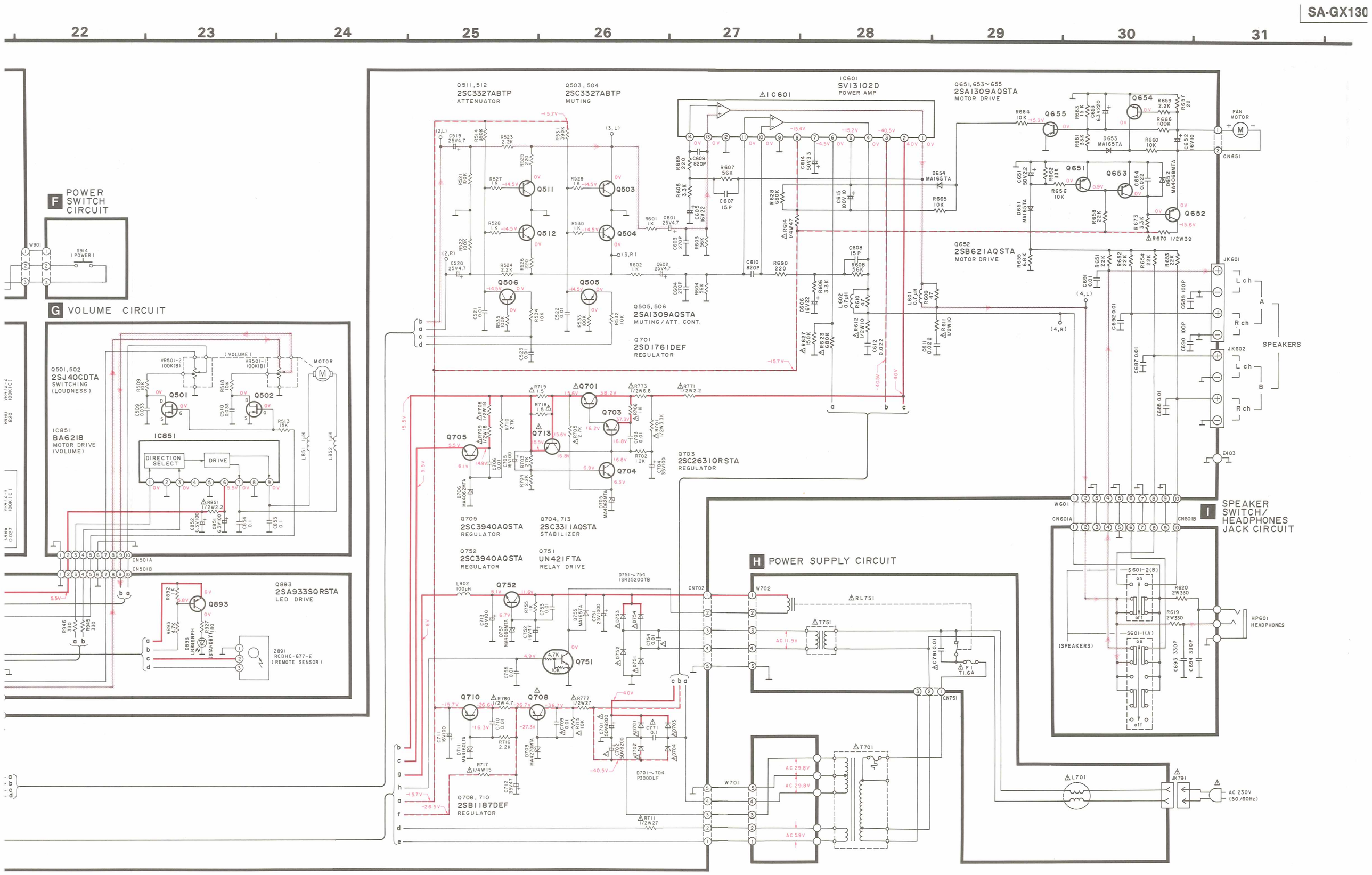
22
23
24
25
26
27
28
29
30
31
F POWER SWITCH CIRCUIT
G VOLUME CIRCUIT
Q501, 502
2SJ40CDTA
SWITCHING (LOUDNESS)
IC851
BA6218
MOTOR DRIVE (VOLUME)
Q893
2SA933SQRSTA
LED DRIVE
Z891
RCDHC-677-E
(REMOTE SENSOR)
Q511, 512
2SC3327ABTP
ATTENUATOR
Q503, 504
2SC3327ABTP
MUTING
IC601
SV13102D
POWER AMP
Q651, 653~655
2SA1309AQSTA
MOTOR DRIVE
Q652
2SB621AQSTA
MOTOR DRIVE
Q505, 506
2SA1309AQSTA
MUTING/ATT. CONT.
Q701
2SD1761DEF
REGULATOR
Q703
2SC2631QRSTA
REGULATOR
Q705
2SC3940AQSTA
REGULATOR
Q704, 713
2SC3311AQSTA
STABILIZER
Q752
2SC3940AQSTA
REGULATOR
Q751
UN421FTA
RELAY DRIVE
Q708, 710
2SB1187DEF
REGULATOR
D751~754
ISR35200TB
D701~704
P300DLF
H POWER SUPPLY CIRCUIT
I SPEAKER SWITCH/ HEADPHONES JACK CIRCUIT
FAN MOTOR
SPEAKERS
HP601
HEADPHONES
AC 230V
(50/60Hz)

■ PRINTED CIRCUIT BOARDS

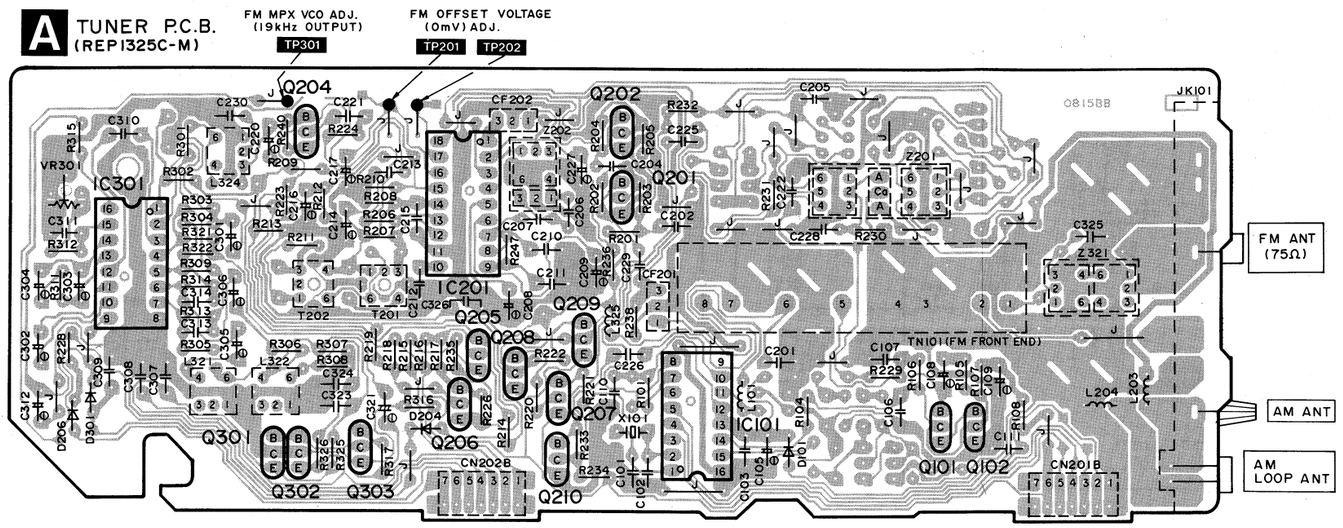

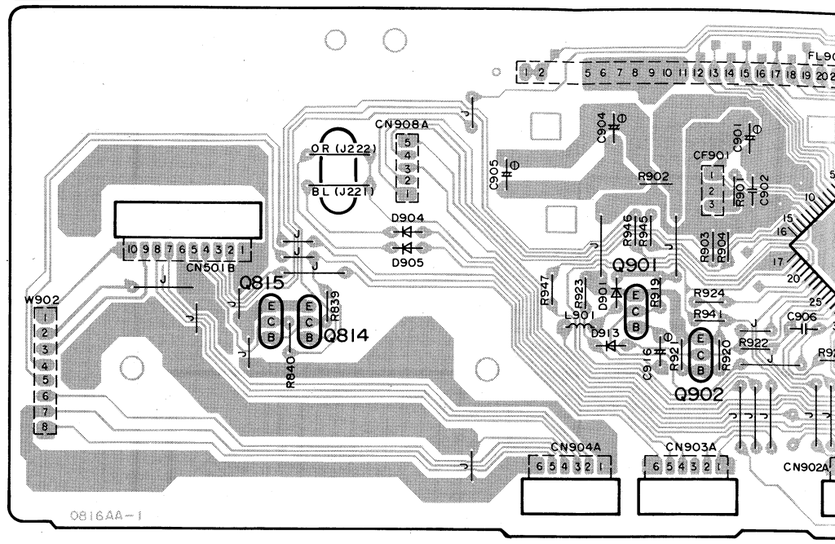

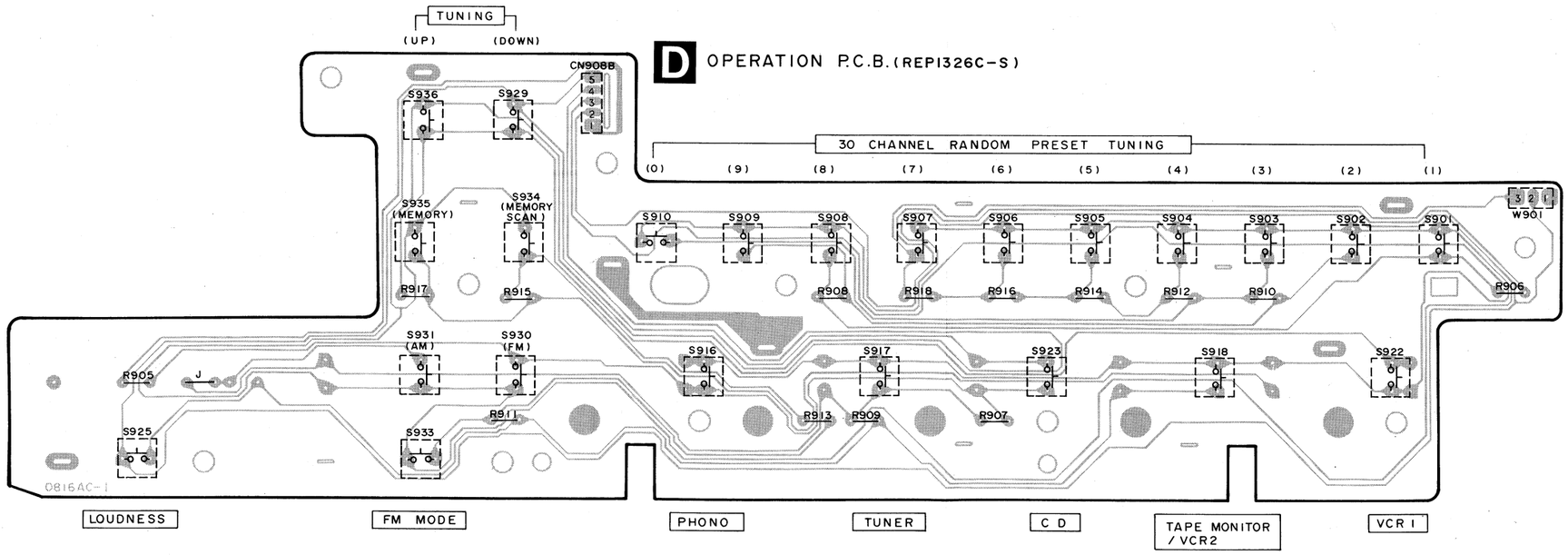

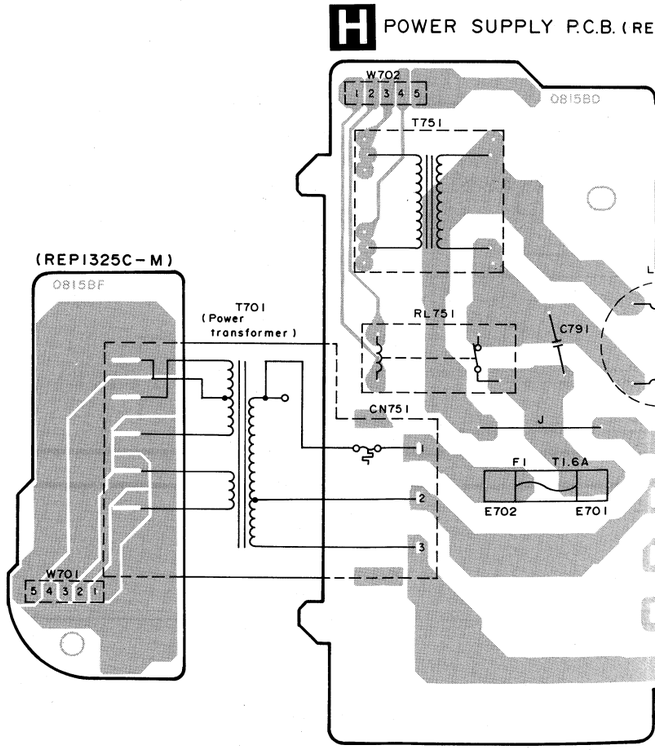

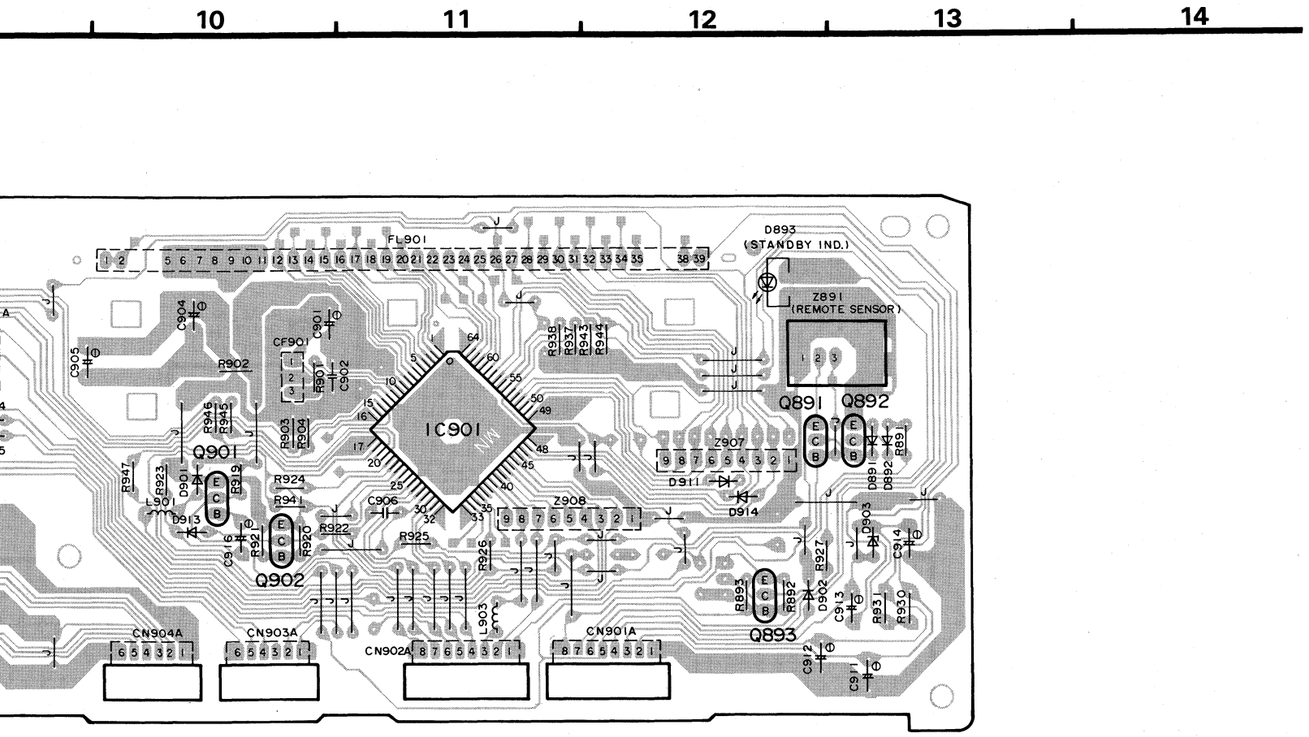

H POWER SUPPLY P.C.B. (REP1325C-M)

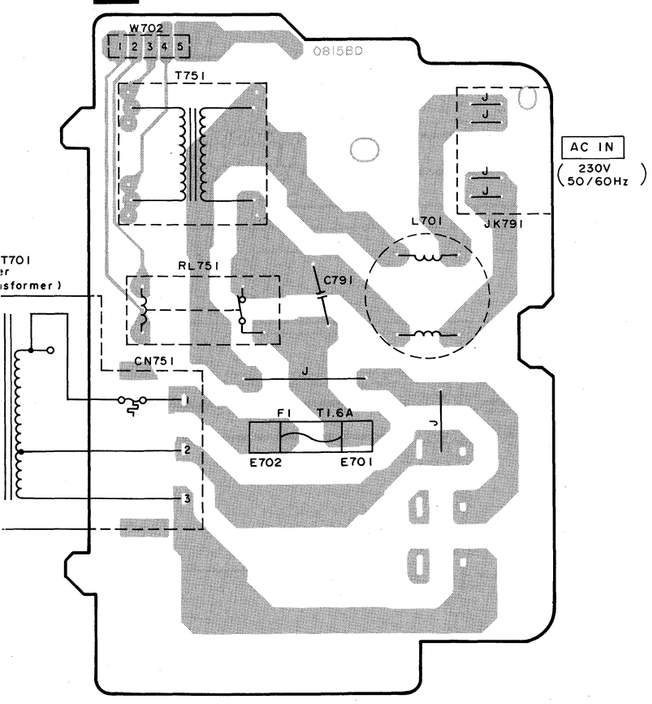

I SPEAKER SWITCH/ HEADPHONES JACK P.C.B. (REP1326C-S)

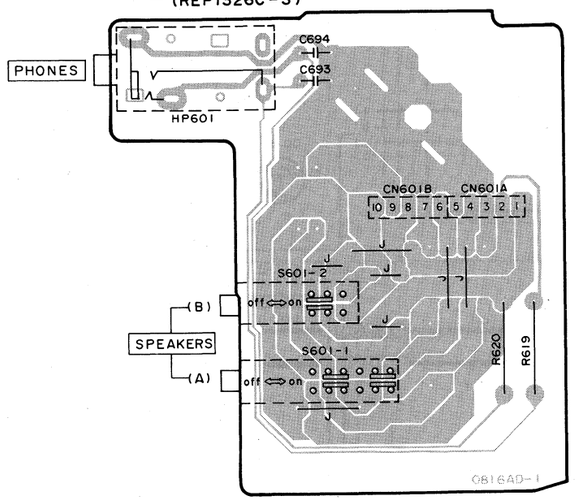

■ WIRING CONNECTION DIAGRAM

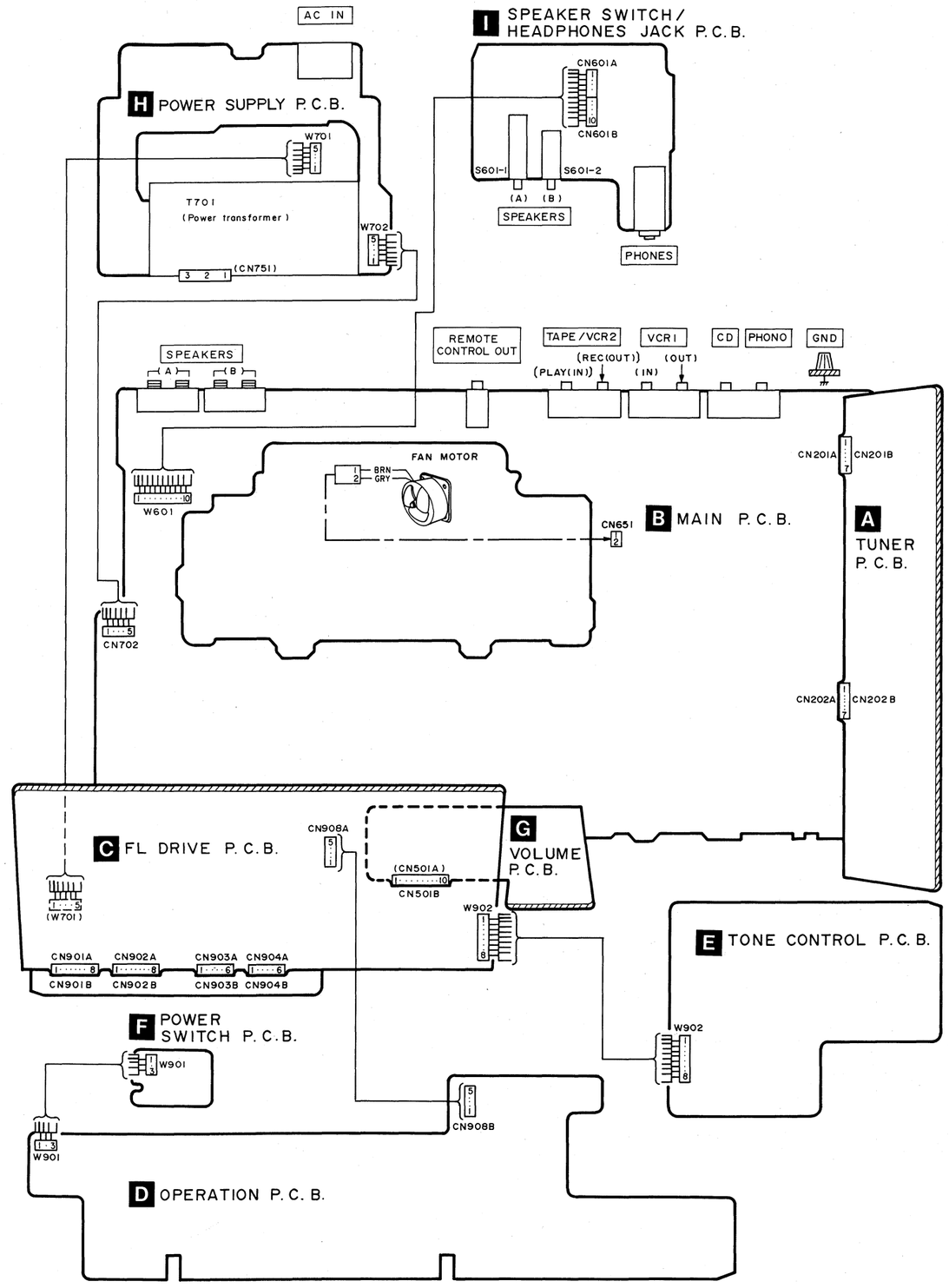

Printed in Japan
H920602500 NH/YU/TN

ORDER NO. AD9306173A8

5574

Service Manual

Simplified

Receiver

AV Control Stereo Receiver **SA-GX130D**

Colour

(K) ... Black Type

Area

Suffix for Model No.	Area	Colour
(E)	Europe.	(K)
(EB)	Great Britain.	
(EG)	Germany and Italy.	
(G)	Asia, Latin America, Middle Near East and Africa.	
(GN)	Oceania.	

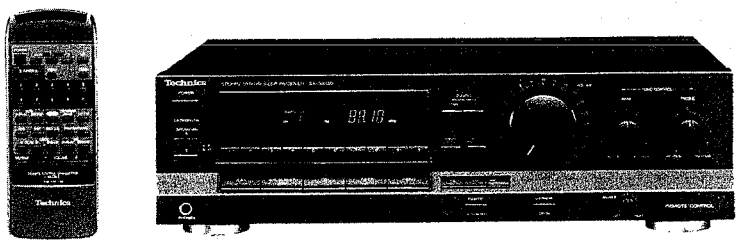

Please file and use this manual together with the service manual for Model No. SA-GX130, Order No. AD9206155C2 (E, EB), AD9206199A2 (EG) and AD9206198A3 (G, GN). +5425 1/21/14/3

Note: • This simplified service manual is provided to indicate the main differences between the original model No. SA-GX130 (E, EG, G) and the subsequent model No. SA-GX130D (E, EB, EG, G, GN).

CHANGES

■ SPECIFICATIONS

SA-GX130 (E, EG, G)

■ REMOTE CONTROL TRANSMITTER

Control keys 32 keys

SA-GX130D (E, EB, EG, G, GN)

■ REMOTE CONTROL TRANSMITTER

Control keys 37 keys

■ ACCESSORIES

SA-GX130 (E, EG, G)

• Remote-control transmitter (RAK-SA302E) ..... 1 pc.

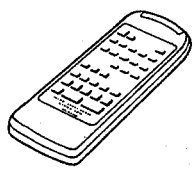

SA-GX130D (E, EB, EG, G, GN)

• Remote-control transmitter (RAK-SA011XH) ..... 1 pc.

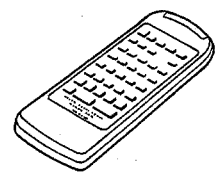

Technics

5574

CHANGES

■ CHANGE IN REPLACEMENT PARTS LIST

Notes:
- Mentioned in this parts list is only those different from Model No. SA-GX130 (E, EG, G). All other parts are the same as for SA-GX130 (E, EG, G).
- Important safety notice: Components identified by ⚠ mark have special characteristics important for safety. Furthearmore, special parts which have purposes of fire-retardant (resistors), high-quality sound (capacitors), low-noise (resistors), etc. are used. When replacing any of components, be sure to use only manufacturer's specified parts shown in the parts list.
- The "(SF)" mark dentes the standard parts.

• For (E, EB) areas.

Ref. No.	Change of Part No.		Part Name & Description	Remarks
	SA-GX130 (E)	➡ **SA-GX130D (E, EB)**		
CABINET AND CHASSIS				
8	RMK0035-4	**RMK0035-5**	CHASSIS	
9	RFKGAGX130EK	**RFKGGX130DE**	FRONT PANEL ASS'Y	
13	RGU0345E-K1	**RGU0345F-K1**	BUTTON, INPUT SELECTOR	
29	RGR0145A-A1	**RGR0145A-C**	REAR PANEL	(E)
		RGR0145A-D		(EB)
PACKING MATERIAL				
P1	RPG1263	**RPG1627**	PACKING CASE	(E)
		RPG1628		(EB)
P2	RPN0328	**RPN0328**	PAD	(E)
		RPN0699		(EB)
P6	——	——	——	(E)
		RPH0032	MIRROR SHEET	(EB) Addition
ACCESSORIES				
A1	RFKSAGX130EK	**RFKSAGX130DE**	INST. MANUAL ASS'Y	(E)
		RQT2056-B	INSTRUCTION MANUAL	(EB)
A4	RJA0019-1K	**RJA0019-2K**	AC POWER SUPPLY CORD	(E) ⚠ (SF)
		VJA0733		(EB) ⚠ (SF)
A7	RAK-SA302E	**RAK-SA011XH**	REMOTE CONTROL TRANSMITTER	
A8	——	——	——	(E)
		SJP9009	ATTACHMENT PLUG	(EB) ⚠ Addition

• For (EG) area.

Ref. No.	Change of Part No.		Part Name & Description	Remarks
	SA-GX130 (EG)	**SA-GX130D (EG)**		
CABINET AND CHASSIS				
8	RMK0035-4	**RMK0035-5**	CHASSIS	
9	RFKGAGX130EG	**RFKGGX130DEG**	FRONT PANEL ASS'Y	
29	RGR0145B-A	**RGR0145B-C**	REAR PANEL	
PACKING MATERIAL				
P1	RPG1310	**RPG1657**	PACKING CASE	
ACCESSORIES				
A1	RQT1549-D	**RQT2059-D**	INSTRUCTION MANUAL	
A4	RJA0019-1K	**RJA0019-2K**	AC POWER SUPPLY CORD	⚠ (SF)
A7	RAK-SA302E	**RAK-SA011XH**	REMOTE CONTROL TRANSMITTER	

• **For (G, GN) areas.**

Ref. No.	Change of Part No. SA-GX130 (G)	➡ SA-GX130D (G, GN)	Part Name & Description	Remarks
CABINET AND CHASSIS				
7	RGW0145-K	**RGW0084**	KNOB, VOLUME	
8	RMK0035-4	**RMK0035-5**	CHASSIS	
9	RFKGAGX130EK	**RFKGGX130DE**	FRONT PANEL ASS'Y	
29	RGR0145C-A1	**RGR0145C-B**	REAR PANEL	(G)
		RGR0145B-D		(GN)
PACKING MATERIAL				
P1	RPG1263	**RPG1627**	PACKING CASE	(G)
		RPG1629		(GN)
P2	RPN0328	**RPN0328**	PAD	(G)
		RPN0699		(GN)
P6	——	——	——	(G)
		RPH0032	MIRROR SHEET	(GN) Addition
ACCESSORIES				
A1	RQT1543-G	**RFKSAGX130DG**	INST. MANUAL ASS'Y	(G)
		RQT2060-G	INSTRUCTION MANUAL	(GN)
A2	——	——	——	(G)
		RQX7433ZA	WARRANTY CARD	(GN) Addition
A4	RJA0004	**RJA0019-2K**	AC POWER SUPPLY CORD	(G) ⚠ (SF)
		RJA0036-K		(GN) ⚠ (SF)
A7	RAK-SA302E	**RAK-SA011XH**	REMOTE CONTROL TRANSMITTER	
A8	SJP9215	——	POWER PLUG ADAPTOR	⚠ Deletion
A10	——	**SJP5213-2**	POWER PLUG ADAPTOR	(G) ⚠ Addition
		——	——	(GN)
A11	——	——	——	(G)
		SQX40022	AM STEREO CAUTION LABEL	(GN) Addition

■ PACKING

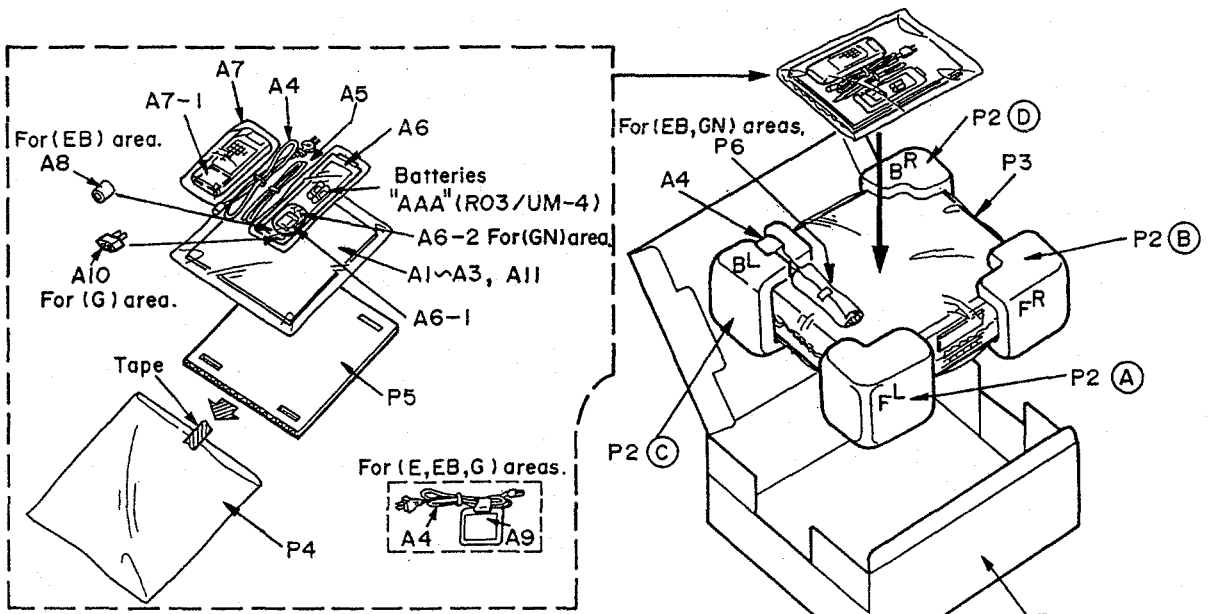

For (E, EG, G) areas. (P2 ⒶⒷⒸⒹ: Part NO. RPN0328)
For (EB, GN) areas. (P2 ⒶⒷⒸⒹ: Part NO. RPN0699)

■ REMOTE CONTROL OPERATION

This remote control can be used to operate units manufactured by this company other than this receiver unit, including CD players/changers, tape decks and also TVs and VCRs.
For detailed information concerning operation steps etc., please refer to the appropriate page for each unit manufactured by this company (other than this receiver unit) including CD players/changers, tape decks and also TVs and VCRs.
Furthermore, the remote control may not operate the unit in some cases due to differences in the remote control signal. (See page 5.)

Before Use

In order to minimize the number of buttons on the remote control, buttons [A], [B] and [C] each perform a variety of functions.
In order to ensure correct operation, be sure to carefully read the explanations provided below.

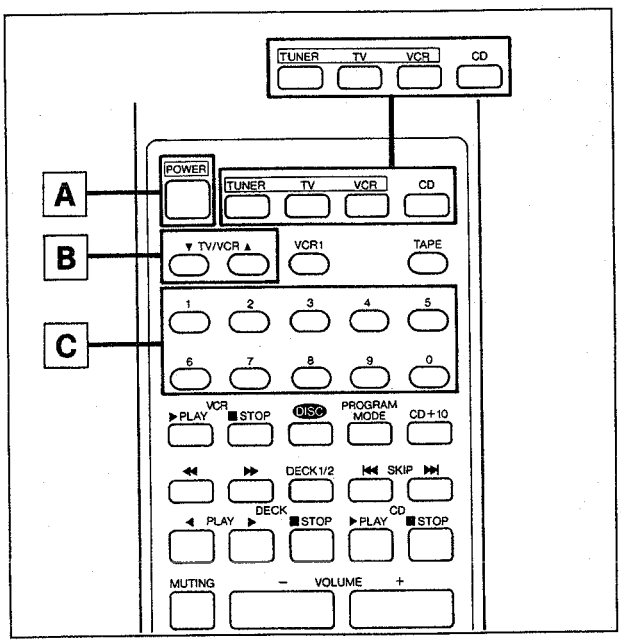

[A] **Power button**
This button is used to switch the power of the receiver, TV, and VCR on and off.

[B] **TV/VCR channel select buttons**
These buttons are used to change the channel for both the TV and the VCR.

[C] **Numeric buttons**
These buttons are used for the following two functions.
(1) To select a preset channel on the receiver.
(2) To select a disc or track on the CD player/changer.

NOTE
To operate, first press the [TUNER], [TV], [VCR], or [CD] button on the remote control to select the appropriate mode for the unit you wish to operate, and then proceed.

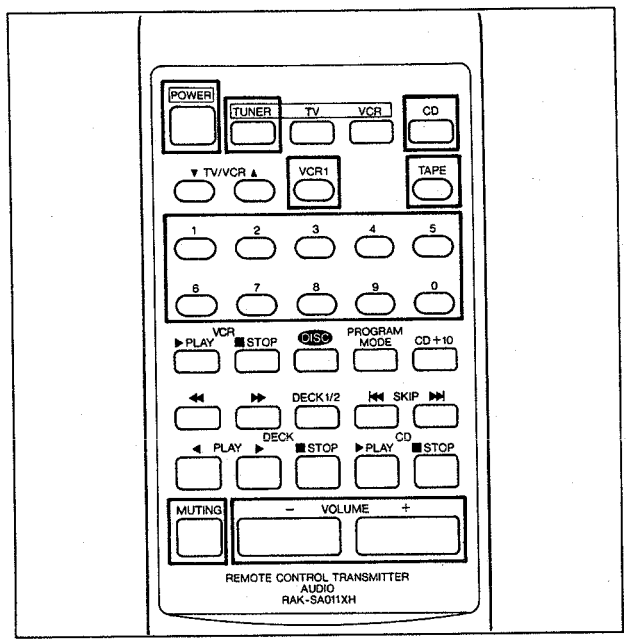

To control the receiver

[TUNER]
Press this button to switch the input of the receiver and the operation mode of the remote control to the tuner.

[POWER]
Press this button to turn the unit ON and OFF. When this button is used, be sure to first press "TUNER" button.

[1] – [0]
Press these buttons to select the desired preset channel.
When these buttons are used, be sure to first press the "TUNER" button.

To designate channels 1–9:
Press the appropriate (1–9) preset-tuning button.

To designate channels 10–30:
① Press the button for the "tens" digit (1, 2 or 3).
② Press the button for the "units" digit (1–0) within 2 seconds after pressing the first button.

NOTE
If the interval between pressing the first button and pressing the second button is more than about 2 seconds, the setting may not be made correctly. If this happens, make the setting once again.

[CD]
Press this button to switch the mode of the receiver to compact disc mode.

[TAPE]
Press this button to switch the input of the receiver to the tape deck.

[VCR 1]
Press this button to select the "VCR 1" input selector on the receiver.

[MUTING]
Press this button to temporarily reduce the volume level.
The volume level is attenuated by 20 dB (approx. 1/10).
Press once again to return to the previous volume level.

[– VOLUME +]
Press one of these buttons to adjust the volume level.

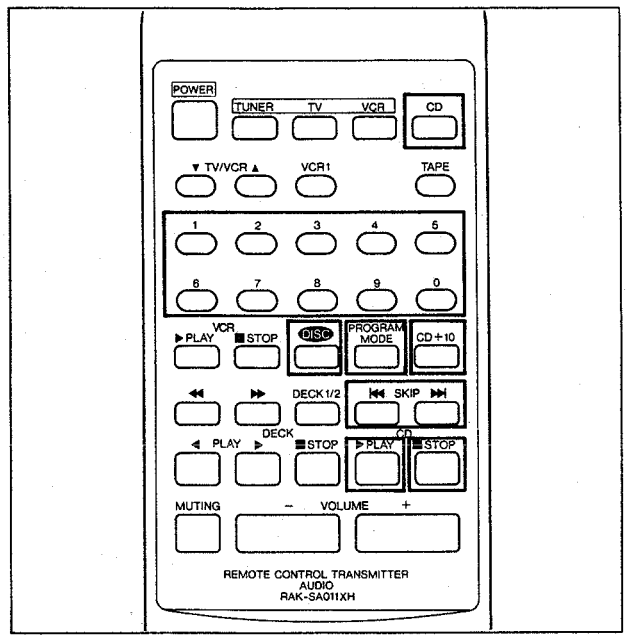

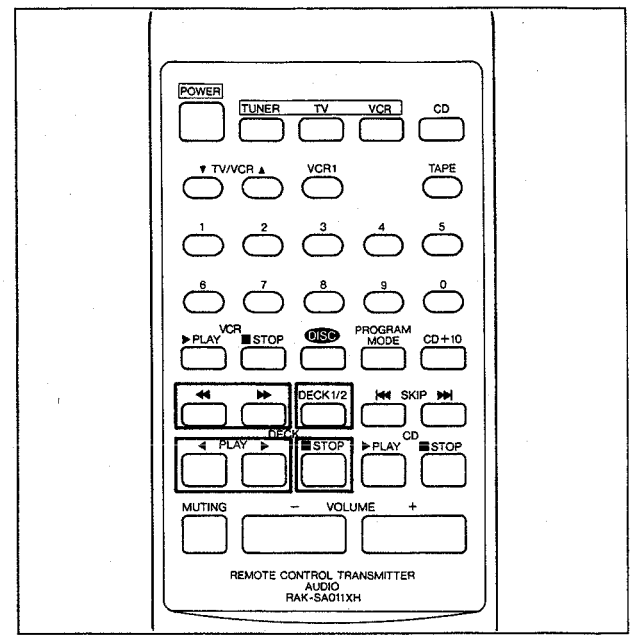

To control the compact disc player

CD

Press this button to switch the numeric buttons to control the CD player/changer.

NOTE

In this case, the mode of the receiver also switches to compact disc mode.

DISC

If a Technics CD changer is used in combination with this unit, the disc to be played can be selected by first pressing this button and then pressing the appropriate numeric button (1 – 5).

1 – 0, CD+10

Press these buttons to select the desired track.
Playback begins from the track selected.
When these buttons are used, be sure to first press the "CD" button.

Tracks 1–9:

Press the appropriate numeric button 1 – 9 directly.

To select a two-digit track number over 10:

Press the CD+10 button the necessary number of time to select the "tens" digit, and then one of the 1 – 0 buttons to select the "units" digit.

PROGRAM MODE

Press this button to select the desired play mode ("program mode" or "sequential mode"). If you have a Technics changer, you can select "delete mode".

|◀◀ SKIP ▶▶|

Press one of these buttons briefly to move the pick-up to the beginning of a specific track.

▶ PLAY

Press this button to start play.

■ STOP

Press this button to stop play.

NOTE

When operating a compact disc player with a remote control sensor, face this remote control transmitter toward the remote control sensor of the compact disc player.

To control the tape deck

DECK 1/2

Press this button to select the deck ("DECK 1" or "DECK 2") to be controlled.

◀ PLAY ▶

Press one of these buttons to begin playback or recording, pressing the button corresponding to the side of the tape to be played back (or recorded).

▶ : For the "forward (A)" side of the tape
◀ : For the "reverse (B)" side of the tape

NOTE

Depending on which Technics tape deck is used in combination with this unit, tape deck 1 might be the "A"-side playback-only type.

◀◀ , ▶▶

Press one of these buttons to advance or rewind the tape while the unit is in the stop mode.
Press one of these buttons to select the desired tune while the unit is in the play mode. (Only applicable to a Technics tape deck with the "music select" functions.)

■ STOP

Press this button to stop tape movement.

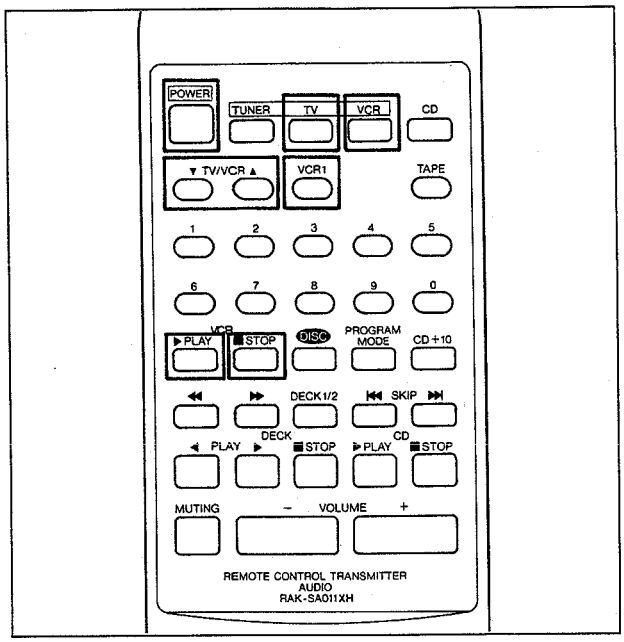

To control TV

NOTE

To perform the following operations, aim the remote control at the TV.

TV

Press this button to set the power button and TV/VCR channel select buttons to the TV mode.

POWER

Press this button to switch the power ON and OFF.
When this button is used, be sure to first press "TV" button.

▼ TV/VCR ▲

Press these buttons to change the channel on the TV.

To control VCR

NOTE

When pressing the **POWER**, **▼ TV/VCR ▲**, **▶ PLAY**, and **■ STOP** buttons, aim the remote control at the VCR.

VCR

Press this button to switch the power button and TV/VCR channel select buttons to the VCR mode.

VCR 1

Press this button to change the input selector on the receiver to the "VCR 1" position.

POWER

Press this button to switch the power ON and OFF.

▼ TV/VCR ▲

Press these buttons to change the channel on the VCR.

▶ PLAY

Press this button to begin play on the VCR.

■ STOP

Press this button to stop play on the VCR.

To operate VCR 2, set the input selector on the receiver to the VCR 2 position.

NOTE

If you operate a TV, VCR, CD player (or CD changer) or a tape deck using this remote control, the unit may fail to operate due to the differing nature of the remote control signal.

If the remote control fails to operate:

It is necessary to reprogram the signal within the remote control by following this simple procedure.

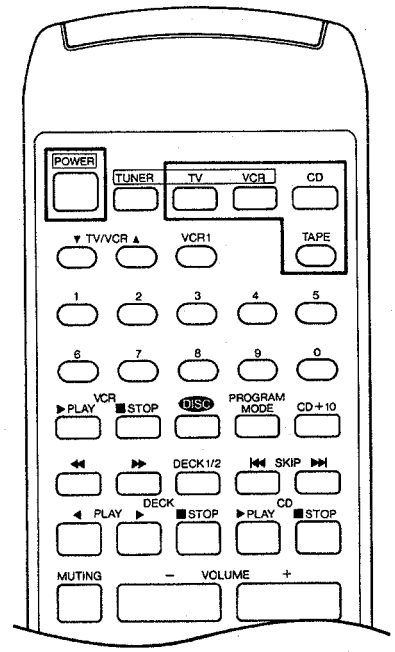

For CD player (or CD changer) operation

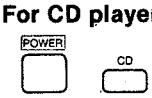

Press POWER and CD simultaneously, hold for 2 seconds.

For TV operation

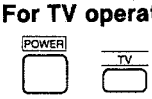

Press POWER and TV simultaneously, hold for 2 seconds.

For VCR operation

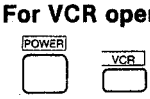

Press POWER and VCR simultaneously, hold for 2 seconds.

For Tape deck operation

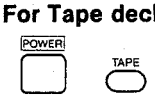

Press POWER and TAPE simultaneously, hold for 2 seconds.

To restore the previous memory contents, carry out the same operations one more time.

Depending on the model, there may be cases where operation is still not possible even if the remote control signal is switched over due to differences in frequency range characteristics.

Printed in Japan
H930611500 NH/YU/TN